AIRFILTER® ENGINEERING

Adsorption Dryer

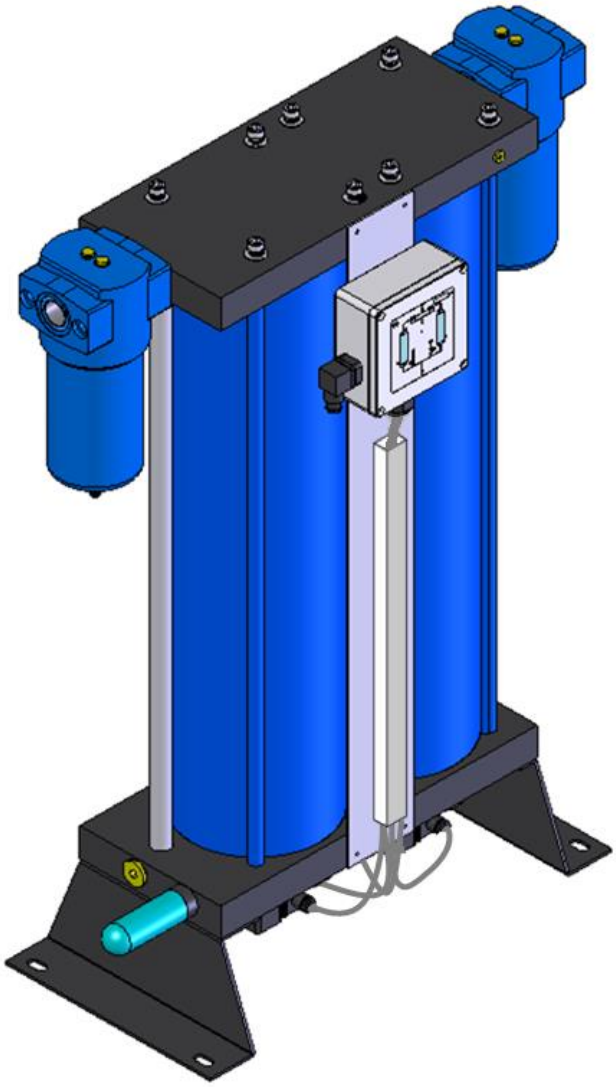

C-HDD-N SERIES

Operating Manual

V.2024-01_EN
HDC2

Machine detail

Model	C-HDD-N_____
Order Number.	
Project Number.	
Unit Serial Number	
Year of manufacture	
Power Supply to Dryer	_____V _____Hz
Issue date of Operating Manual	
Year of manufacture	

Suffixes indicating filter type, voltage and accessories are added to model numbers accordingly.

It is the responsibility of the owner,

- to enter for the first time the above appliance data.
- to keep these appliance data up to date.

The above-stated appliance data provide for a clear identification of the dryer and its components, and significantly facilitate any service measures.

Further important data on the dryer such as the details on the permissible operating pressure and the electrical connection are found on the type plate (for position of the type plate see page 8).

Airfilter Engineering has a continuous policy of product development and although the Company reserves the right to alter specifications, it attempts to keep customers informed of any alterations. This publication is for general information only and customers are requested to contact our appointed dealers for detailed and current specifications, and advice on a product's suitability for specific applications. All products are sold subject to the Company's standard conditions of sale.

Table of contents

Details on the dryer ... 6
About these operating instructions ... 7

For your own safety ... 8
Signs, instruction plates and danger zones at the dryer ... 8
Intended use of the dryer ... 10
General safety notes ... 10
Safety notes on specific operating phases ... 11

Technical product description ... 14
Drawing overview ... 14
Function description ... 15
Available options ... 17

Transportation, installation and storage ... 19
Information on transportation packaging ... 19
What to do in the case of transport damage occurring? ... 20
Transporting and installing the dryer ... 20
Installing and anchoring ... 21
Storing the dryer ... 21

Installation ... 23
Preconditions for installation ... 23
Connect piping ... 23
Installing the electrical connection ... 24

Start-up ... 26
Requirements for initial start-up ... 26
Setting times of the operating phases ... 27
Emergency shutdown ... 27
Start up dryer ... 27
Changing Cycle Mode (Optional) ... 30
Protected Setting Mode ... 32

Monitoring dryer operation ... 34
With Dewpoint-Sensing Control (Optional) ... 34
Monitoring via MODBUS RTU ... 35

Shutdown and restart dryer ... 36
Emergency shutdown ... 36
Depressurising and shutting down the dryer ... 36
If work is to be carried out on the electrical system ... 37
Restart ... 38

Maintenance and repair of the dryer 39
Notes on maintenance 39
Dryer Assembly Mechanism 40
Regular maintenance intervals 41
Daily maintenance tasks 42
Weekly maintenance tasks 42
Monthly maintenance tasks 43
Maintenance work to be completed every 12 months 43
Maintenance work to be completed every 48 months 44

Identify and eliminate faults 51
Summary of faults 51

Annex with technical documentation 54
Logic control diagram 55
P&ID 57
MODBUS RTU Register Map 58
Dimensional drawing 60
Replacements and Consumables List 61

Declaration of Conformity 62

Details on the dryer

Standard equipment

Dryer, comprising

- 2 vessel columns filled with desiccant
- 1 upstream filter
- 1 downstream filter
- Silencer
- Control system

Associated documents

- Operating Manual (present)
- Technical documentation (see annex)

Warranty notes

In the following cases, the warranty shall be void:

- If aggressive media in the compressed air and in the environment cause corrosion damage and functional faults on the dryer.
- If the dryer is used without prior approval and confirmation in writing by the manufacturer for purposes other than those specified in these operating instructions or contractually agreed.
- If preset parameters (e.g. on the control system etc.) are changed without prior approval and confirmation in writing by the manufacturer.
- If the dryer is transported or stored incorrectly.
- If the dryer is sited and installed incorrectly.
- If the dryer is repaired or maintained incorrectly.
- If the dryer is operated by personnel that does not have the requisite qualifications.
- If modifications are carried out on the dryer, the manufacturer did not approve that.

In the event of non-compliance the manufacturer will not accept any liability for any consequential damage whatsoever.

About these operating instructions

These operating instructions contain basic information on the safe use of the dryer.

It is recommended for the owner to complete reading this Manual before handling the C-HDD-N dryers.

Characters and symbols used

► Work steps that you have to carry out in the sequence stated are marked by black triangles.

■ Lists are marked by a small box.

> **Note**
>
> **These notes provide you with hints and information on the safe and efficient handling of machines and devices.**

Warning

These safety notes warn against damage to property and help you to avoid such damage.

Danger

These danger notes with a grey background warn against personal injury and/or danger to life and limb; danger notes help you to avoid serious or life-threatening situations for yourself and/or third parties.

Target group of these operating instructions

These operating instructions are intended for all persons working on and using the dryer. We assume that all such persons are specialist personnel, e.g. fitters or electricians.

Operating instructions: handling

These operating instructions must be continuously available at the site where the dryer is used. We recommend to prepare a copy and to keep the same in a safe and freely accessible place next to the dryer. Keep the original document in a safe place.

For your own safety

The dryer has been built in accordance with the state of the art and the recognized technical safety regulations. Nevertheless, there is a risk of personal injury and damage to property when the dryer is used, if

- it is operated by non-qualified personnel,
- not used within its intended design specifications,
- is repaired or maintained incorrectly.

> **Note:**
>
> **For your own safety and to prevent machine damage, please note the information and safety notes in these operating instructions when working with the dryer.**

Signs, instruction plates and danger zones at the dryer

Signs and instructions

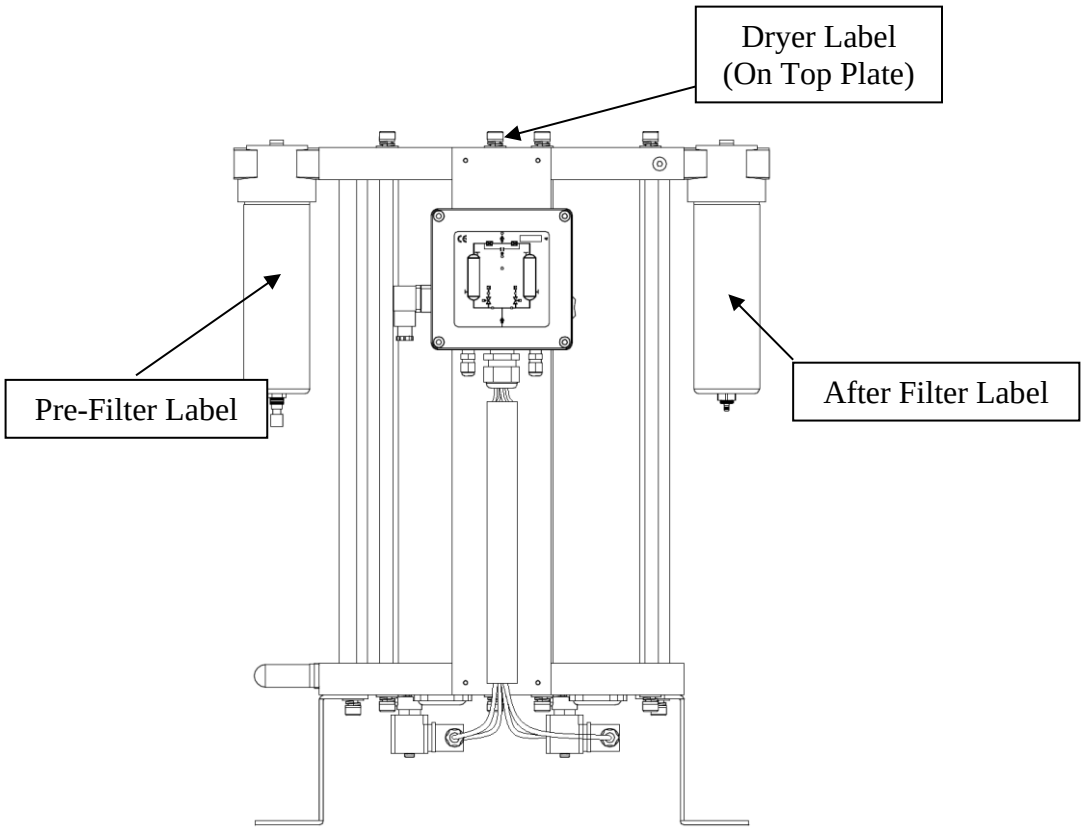

Please note the above plates and instructions attached to the dryer. Ensure that they are not removed and are always readable.

Hazard areas on the dryer

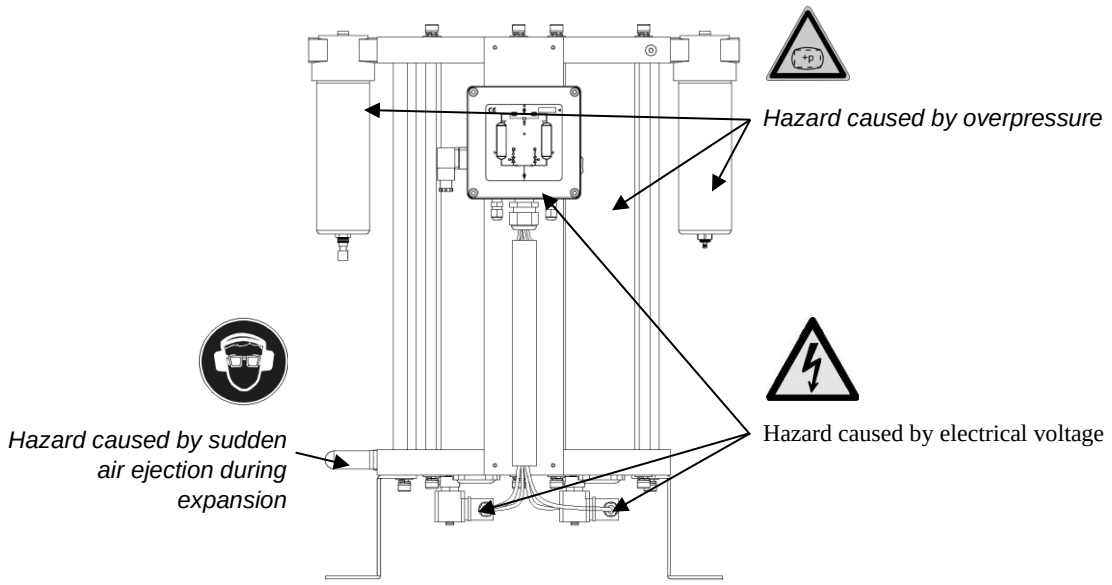

Hazard area	Symbol in operating instructions
Warning against hazardous electrical voltage Different parts of the dryer carry electrical current. These parts may be connected, opened, and maintained by authorized specialist personnel only.	
Warning against overpressure The entire dryer is under pressure. Before commencing any work, the plant must be depressurised.	
Warning against sudden air ejection When the vessels are depressurised, air flows suddenly out of the sound absorber: ■ This causes a sudden loud cracking noise. ■ Due to particles carried in the air flow, there is a very considerable risk of eye injury. When working on the dryer, always wear eye and ear protection equipment.	
Skid risk When emptying and filling the vessels with drying agent, there is a risk of skidding caused by spilt drying agent.	

Intended use of the dryer

The dryer is exclusively intended for drying compressed air. Depending on defined input conditions, it dries compressed air for industrial use.

The dryer is designed for compressed air, which is free from aggressive water, oil, and solid matter constituents.

As standard, the dryer is intended to be sited within a building and protected against the weather. When it is sited in the open air (option), the instructions on page 17 must be complied with.

The dryer may be operated only in accordance with the data on the type plate and in accordance with the contractual conditions.

Suspected misuse

The dryer must not be misused as a climbing aid! It is not designed for such loads. Unforeseen mechanical failures are imminent.

General safety notes

For your own safety, when carrying out any work on the dryer comply with all applicable national safety regulations!

Personnel qualification

Only authorized and qualified specialist personnel may be tasked with the work on the dryer described in these operating instructions.

Conversions and modifications

Without prior approval by the manufacturer, no conversions and modifications must be made to the dryer! Any non-approved modifications may restrict the operational safety of the dryer and cause damage to property or personal injury.

Handling drying agents

The drying agents are perfectly safe when in an unused condition. However, when filling and emptying the vessels with drying agents, increased dust generation may occur. Please comply with the following instructions:

- When filling drying agents into the vessels, wear a dust mask and eye protection!
- If a spillage occurs, any spilt drying agent must be taken up immediately. There is a risk of skidding!

Safety notes on specific operating phases

Transportation and siting

- Only use suitable and technically perfect lifting gear with a sufficient carrying capacity.
- Carefully secure the dryer during transportation.

Start-up

Warning against sudden air ejection!

During expansion the pressure is released suddenly through the silencer:

- **A loud expansion noise is caused which may damage your hearing.**
- **Particles carried in the air can injure your eyes or skin.**

Always wear eye and ear protection, therefore, when you are in the vicinity of the dryer!

Hazard due to a sudden release of pressure!

Never remove any parts of the dryer, or manipulate the same in any way, for as long as the plant is still pressurised! A sudden escape of pressure may cause serious injuries.

Before carrying out any work on the dryer, first depressurise the plant.

- Carry out all prescribed tests and checks.
- The factory settings on the control board in the switchbox must not be changed on any account without prior approval by the manufacturer.
- Before start-up, ensure that no tools or other foreign parts have been left lying in a part of the dryer where they might pose a hazard to the dryer being started up.

Emergency shutdown

- In any emergency, proceed as described in the section on page 36.

Monitor operation

Warning against sudden air ejection!

During expansion the pressure is released suddenly through the silencer:

- **A loud cracking noise occurs which can injure your hearing.**
- **Particles carried in the air flow act like bullets and can injure your eyes or skin.**

Always wear eye and ear protection, therefore, when you are in the vicinity of the dryer!

- Only operate the dryer within the permissible limits (see dryer label). By operating the dryer in conditions that go beyond the defined values, the dryer is subjected to loads for which it has not been designed. This may cause functional defects.
- The more powerful the dryer is, the more noise may be generated during operation. Therefore, the operator must provide suitable protective equipment (e. g. ear protection).
- Check the dryer regularly for externally visible damage and defects. Any changes, even in its operating behaviour, must be reported immediately to the competent office or person.
- In the event of an emergency or if a safety-relevant disruption occurs (e.g. escaping compressed air, defective component), the dryer must be shut down immediately as described in the section on page 36). The unit may only be restarted after all defects have been eliminated.

Maintenance of the dryer and fault removal

Hazard due to a sudden release of pressure!

Never remove any parts of the dryer, or manipulate the same in any way, for as long as the plant is still pressurised! A sudden escape of pressure may cause serious injuries.

Before carrying out any work on the dryer, first depressurise the plant.

- Carry out maintenance work only when the plant has been shut down and depressurised!
- The factory settings on the control board in the switchbox must not be changed on any account without prior approval by the manufacturer.
- Bolt connections must be undone with care! Note ram pressure values! Otherwise emerging media may cause personal injury.
- Never carry out any welding on and or change the same in any other way!
- Never use pipes and fittings as steps or holding points! The components might fracture, or the distortions which occur may cause internal damage on the dryer. There is a risk of injury by slipping off the components, components breaking off, and expanding compressed air!
- Never leave tools, loose parts or cloths in, at or on the dryer.
- Following maintenance work always test all bolt connections for leak tightness and secure seating.
- Only use replacement that are suitable for the relevant function and meet the technical requirements stipulated by the manufacturer. This is always the case, if you use original replacement parts only.

Disassembly and disposal

Hazard due to a sudden release of pressure!

Never remove any parts of the dryer, or manipulate the same in any way, for as long as the plant is still pressurised! A sudden escape of pressure may cause serious injuries.

Before carrying out any work on the dryer, first depressurise the plant.

- Dispose all parts of the dryer, the drying agent, and all other operating materials in an environmentally safe way and in accordance with all current statutory regulations. The waste code of the drying agents can be obtained from the manufacturer (for the manufacturer's address see page 5).

Technical product description

Drawing overview

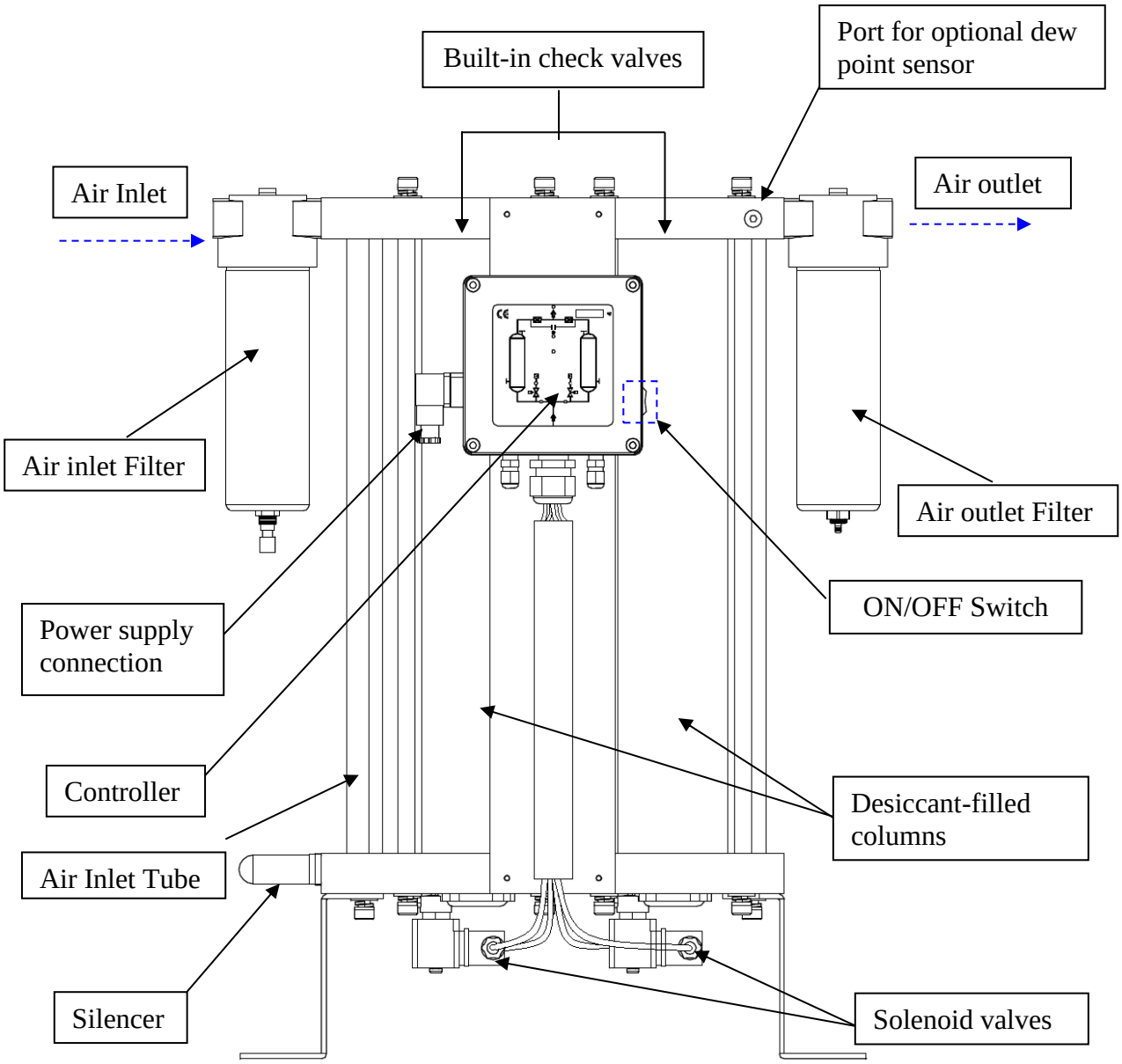

Function description

The dryer dries the compressed air supplied by the compressor and makes it available for industrial use.

Upstream filters clean the compressed air and remove dust, dirt, oil, and water droplets, before the compressed air reaches the dryer. Thus, an upstream filter is also used for extending the service life of the drying agent.

Downstream filters clean the compressed air from drying agent abrasions, before it is fed into the compressed air system.

The two vessels contain an extremely porous drying agent by means of which humidity is removed from the compressed air and stored just as in a sponge. The stored humidity is then removed again from the drying agent and re-introduced into the ambient environment.

To this end, the two vessels alternate between different operating modes. Whilst in one vessel, compressed air is de-humidified (adsorption), in the other vessel the humid drying agent is being prepared for another charge (regeneration). These two states, which run in parallel during compressed air preparation, are described below.

Via a compressor, humid compressed air is supplied to the upstream filter. From here, the compressed flows upwards through the adsorption vessel, which is pressurised. In so doing, the drying agent dehumidifies the air. The dry compressed air is supplied to the pipe network via the downstream filter.

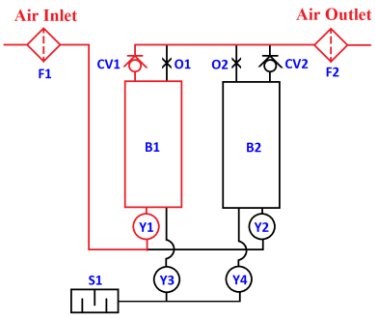

Here, adsorption is shown in the left vessel.

Regeneration (running in parallel to the adsorption)

At the same time the other vessel is prepared for a renewed take-up of humidity. This process is called regeneration.

The regeneration is subdivided into three phases: expansion, dehumidification, and pressure build-up.

Please do take note that **standard** C-HDD-N series are operating with regeneration by means of **Fixed Cycle Regeneration (Timer Control)**.

For C-HDD-N to run with **Variable Cycle Regeneration (Dew Point Dependant Control)**, please refer to the Protected Setting Mode on page 32 for details.

Expansion

During the expansion phase, the pressure in the alternate vessel is released via the silencer down to ambient pressure within just a few seconds. The outflow of the compressed air becomes noticeable due to a sudden powerful flow noise at the silencer.

Dehumidification

Prior to being released into the pipe network, dried compressed air is bled by means of an orifice. This separate regeneration air flow is fed through the depressurised vessel. The humidity stored in the drying agent is taken up by the air flow and expelled into atmosphere via the silencer.

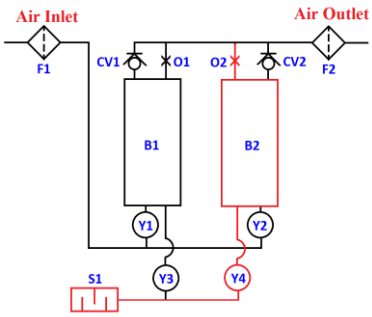

Here, regeneration is shown in the right vessel.

Pressure build-up

After dehumidification, the pressure in the regenerated hollow section vessel is built up to operating pressure, so that the switchover from regeneration to adsorption can take place at operating pressure level.

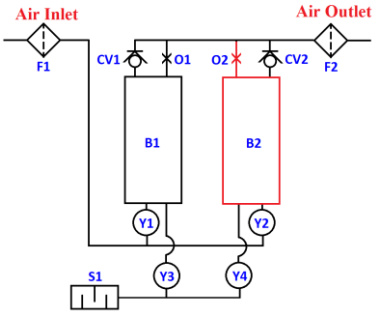

Pressure build-up

Standby phase (Only with the *DewPoint-Sensing control* option)

When in standby phase, the fully regenerated vessel is ready for adsorption operation. The system is switched to this vessel, as soon as the measured dewpoint at the compressed air outlet has reached the set dewpoint value for switchover.

Switchover

When the drying agent in the adsorbing vessel has taken up a sufficient level of humidity, then the switchover between the vessels will commence between the vessels. Following switchover, the above-described process is repeated, with the adsorption and regeneration now taking place in the respective different vessel.

Available options

The following options are available for the dryer:

- Start-up device
- Outside installation
- Bypass line
- Signalling contacts of control system
- Dewpoint-sensing control
- Paint compatible design

Start-up device

A start-up device basically consists of a pressure holding device, which is located downstream of the dryer. The pressure holding device ensures that pressure can build up in the dryer and adsorption take place.

It is always required when an empty compressed air reservoir or an empty compressed air system must be filled downstream of the dryer (e.g. following weekend shutdowns and when the pressure in the compressed air system can frequently drop below the stated operating pressure).

Outside installation

As standard, the dryer is not suitable for outside installation, as its function and service life is influenced by the following factors:

- Environmental humidity due to rain (or other deposit)
- Corrosion caused by environmental humidity or a salt-containing environment
- Freezing of valves, cocks, flaps, and other components at low temperatures

Therefore, a planned outside installation must always be discussed in advance with the manufacturer to allow specific technical design measures to be provided for the installation location.

Bypass line

The bypass line is a "detour line", which allows the compressed air system to continue operating even whilst maintenance of the dryer is in progress. However, during this time the air is not dried but flows through the bypass line past the dryer and through to the actual loads.

Filters in the bypass line are meaningful so that the actual loads are largely protected against dirt, water, and oil droplets even whilst maintenance is in progress.

Dewpoint-sensing control

With a dewpoint-sensing control system, you can operate the dryer in fixed or variable cycles. In the fixed cycle, switchover commences after a fixed time period (usually after 5 minutes). In the variable cycle, the switchover commences in relation to the dew point reached and the charging of the drying agent. The adsorption time in the variable cycle amounts to 30 minutes maximum.

Paint compatible design

Paint shop plants impose particularly stringent requirements with regard to the cleanliness of the compressed air, as already the contaminations can reduce the quality of the paint finish. Even minute quantities of oil and grease containing foreign materials or solvents — above all silicones — are sufficient to cause pits, discolorations, swellings, and other contaminations in the paint finish.

Dryers in a paint compatible design comprise seals and filters that are absolutely free of grease and silicon and thus ensure a high quality of the compressed air used for painting.

Transportation, installation and storage

Danger due to incorrect transportation!

The dryer must be transported by authorized and qualified specialist personnel only. During transportation all applicable national regulations for accident prevention must be complied with. Otherwise, there is a risk of personal injury.

- Only use suitable and technically perfect lifting gear with a sufficient carrying capacity.
- During transportation the dryer must be carefully secured against falling over.

The manufacturer will not be liable for any damage caused by incorrect storage or incorrect transportation. Please note therefore the following instructions as well as the storage instructions on page 21.

Information on transportation packaging

Depending on the type of transportation, the dryer is delivered in different types of packaging:

- All transportation types: the apertures of the dryer are closed off by means of plugs.
- The dryer is packaged in a carton box secured on top of a wooden pallet.

If the packaging is undamaged

► The undamaged packaging should be removed only at the final installation site, as it offers protection against any weather influences.

Handling to relocate dryer

► **Do not** use the dryer's inlet tube as a grip/hoist when moving the dryer around. This might cause damage to the sealing o-rings.

► **Do not** use the controller bracket for hoisting.

► Grab hold of the Top/Btm Plate or Columns instead.

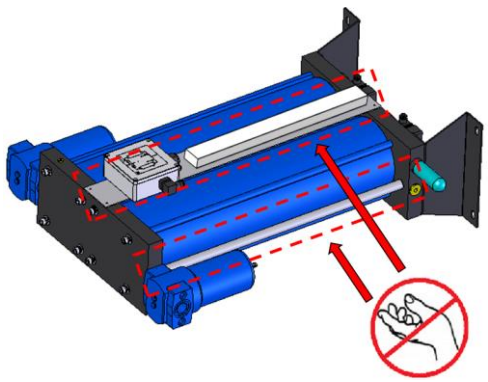

What to do in the case of transport damage occurring?

- ► Check whether only the packaging or the dryer itself were damaged.
- ► Inform the haulier immediately in writing of any damages.
- ► Contact the manufacturer urgently in order to report the damage. You will find the telephone number on page 5.

Warning!

A damaged dryer must not be taken into operation! Damaged components may lead to functional faults and possibly cause further damage.

Transporting and installing the dryer

Requirements for the installation site

The conditions at the installation site have a large influence on the functional capability of the dryer and the service life of the drying agent. In order to ensure a mode of operation, which is as continuous as possible, and low maintenance, the installation site must meet the following requirements:

- The installation site must be located within a building. Protect the dryer against moisture. For outside installation (option) the instructions on page 17 must be complied with.
- The ambient temperature must not drop below +1 °C (33,8 °F).
- Heed the dryer's noise emission when selecting the installation location.
- The installation area must be level and firm. It must have the necessary carrying capacity for the weight of the dryer. The weight of the dryer is specified in the technical data section of the annex.
- The dryer should be installed with sufficient spacing at the top, sides, and rear, in order to be able to carry out maintenance work and change the drying agent without any hindrances (see figure).

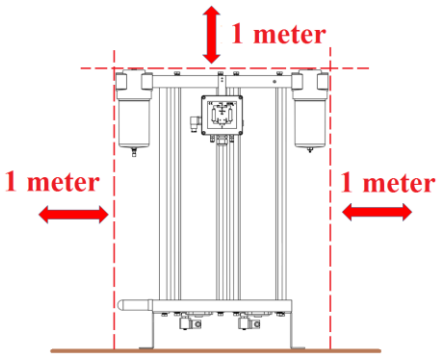

Necessary spacing at the top and sides = min. 1 m

If in doubt, the installation site must be inspected by specialists. If you have any queries in this regard, please contact the manufacturer (for details see page 5).

Transportation using lifting or forklift trucks

Warning against damage to property!

The dryer is delivered lying on its side on a transportation pallet. At the top it is protected by a carton. Top and sides have not been designed for mechanical loads.

Therefore do not place any load onto the top face. Do not stack.

Therefore, always transport the dryer on a lifting or forklift truck.

- ► Secure the dryer on the lifting or forklift truck against sliding movements.
- ► Transport the dryer to its installation site.

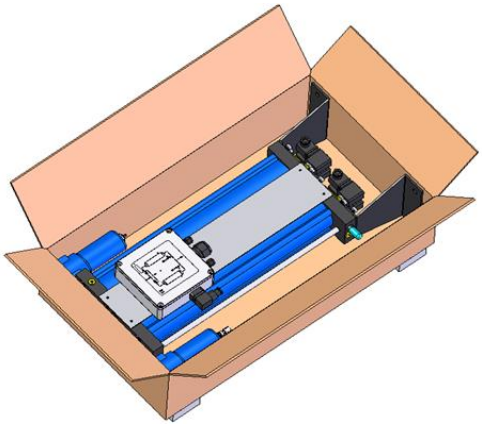

Dryer in Carton

Installing and anchoring

Anchoring the dryer

The upright stand profiles of the dryer are provided with four pre-drilled anchorage bores.

- ► Use suitable attachment material to anchor the dryer to the floor (see figure).
- ► *In the case of vibrating floors:* place the dryer on suitable vibration dampers.

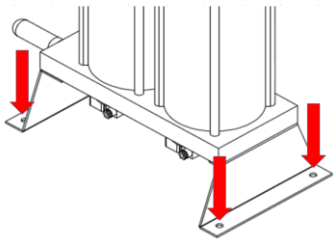

Bores at the foot of the dryer

Storing the dryer

If the dryer is to be stored for an extended period of time, the storage location must meet the following conditions:

- The dryer must not be stored in the open air.
- The storage room must be dry.
- The storage room must be free from dust or the dryer must be covered by a protective sheet.
- The storage room must have an ambient temperature of at least +1 °C (33,8 °F).

In order to store the dryer proceed as follows:

- ► Take dryer out of operation as described on page 36.
- ► Ensure that the compressed air inlet valve installed by the owner, and the installed compressed air outlet valve installed by the owner, are both closed, and that the dryer is depressurised.
- ► Disconnect dryer from the compressed air system.
- ► Disconnect the dryer from the electrical power supply and all external lines.
- ► Use film material or similar to close the compressed air inlet apertures and compressed air outlet apertures on the dryer in order to protect them against contamination.
- ► If possible, cover the dryer with a protective sheet.

The dryer can now be stored for long periods.

> **Note:**
>
> **If you wish to take the dryer back into service after an extended period of storage, please proceed as described for its first commissioning and start-up (see page 28).**

Store drying agents

- ► Do not store drying agents in the open air.
- ► Protect drying agents against humidity.

Installation

Only authorized and qualified specialist personnel may carry out work on pipes and electrical systems.

As soon as the dryer has been set up at its installation location, you can install the compressed air infeed and outlet lines to make the electrical connections.

Preconditions for installation

For a correct installation the following preconditions must be met on the part of the owner.

- Connections and lines for the infeed and outfeed of compressed air must be provided.
- A compressed air inlet valve as well as a compressed air outlet valve must be installed by the owner, so that the dryer can be installed and maintained in a depressurised condition (see also the installation example on page 24).
- All pipes, couplings, and connections must have the correct diameter and match the operating pressure.

Hazard caused by exceeding the limit values!

A safety device must be provided in order to protect against the maximum permissible operating pressure from being exceeded.

The safety device must be installed so that the dryer is reliably protected from exceeding the maximum permitted operating pressure even when the temperature of the compressed gas increases.

The data required to meet these preconditions are contained in the technical documentation attached in the annex.

Warning!

If the above preconditions are not complied with, a safe operation of the dryer cannot be assured. Also, the functionality of the dryer may be detrimentally affected.

Connect piping

In order to ensure that the dryer operates optimally, the dryer must be assembled into the compressed air system free of all stresses.

► Ensure before connection that all infeed and outfeed compressed air lines and valves are clean and undamaged.

- ► Check the bolt connections and retighten if necessary, as they could have worked loose during transportation.
- ► Remove plugs on the pressure inlet and outlet.

All piping must be free from any stress and tension whatever!

Pipes subject to stress may burst due to the load placed on them during operation. This may cause damage to property and personal injury.

- ► Use steel pipes to connect the dryer to the compressed air system.

The following figure shows an installation example.

Compressed air system	Item	Component
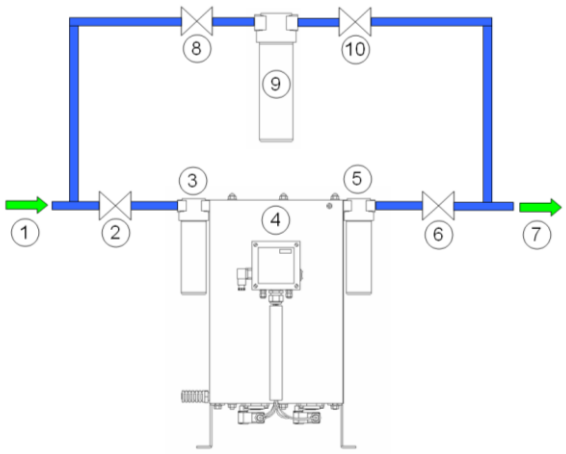	1	Inlet (humid air)
	2	Air inlet valve (owner end)
	3	Upstream filter
	4	Dryer
	5	Downstream filter
	6	Air outlet valve (owner end)
	7	Outlet (dry air)
	8	Bypass line valve (optional)
	9	Bypass Filter (optional)
	10	Bypass line valve (optional)

Example of an installation with bypass line

- ► The connection lines for the upstream filter (3) are to be installed at a slight incline in the direction of the upstream filter.
- ► One shutdown valve each (2, 6) is to be installed at the compressed air inlet and outlet ends of the dryer.
- ► *If you fit a bypass line with additional shutdown valve:*
  Fit the line such that, when carrying out maintenance work on the dryer, the line system can continue to be supplied with compressed air.

Installing the electrical connection

Warning against electrical voltage

Only qualified specialist personnel may carry out work on the electrical system!

Installing the supply cable

The components of the dryer have been connected to the control cabinet at the factory. You only need to connect the control cabinet to the electrical supply cable.

The controller is provided with a connector where electrical power must be connected.

- ► Ensure that the cross-section of the electrical supply cable corresponds to the power rating of the dryer and the electrical voltage provided by the customer.
- ► Connect the electrical supply cable to the dryer voltage-free.
- ► Secure the electrical supply cable to the dryer against switch-on.
- ► Now make the cable connection as follows:
  - Earth to terminal PE
  - L1 to terminal 1
  - N to terminal 2

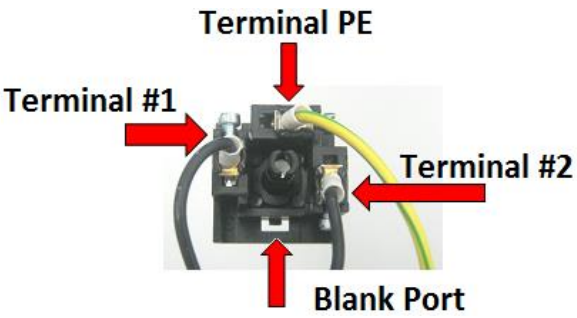

- ► In all phases the dryer must be protected against short circuits by means of fuses.
- ► In order to relief cable strain, re-tighten the PG union.

To install the external line, proceed as follows:

- ► Connect the signalling line to the potential-free busbar connection of the compressor to terminals 1 and 2 on the control board (see circuit diagram).

Check bolt connections

Before the initial start-up:

- ► Check all fastener connections as well as the terminals in the controller for secure seating; re-tighten if necessary.

Start-up

Warning!

The dryer must be taken into operation by trained personnel only! Untrained personnel does not have the required knowledge. Such personnel might cause serious faults.

> **Note:**
>
> **You can order the initial commissioning and start-up from the manufacturer and have your personnel trained by the manufacturer. For telephone number, see page 5.**

- Carry out all prescribed tests and checks.
- Before start-up, ensure that no tools or other foreign parts have been left lying in a part of the dryer where they might pose a hazard to the dryer being started up.

Requirements for initial start-up

For the first start-up the following preconditions must have been met:

- The pipe system is free from
  - scales
  - thread abrasions
  - welding beads and
  - other contaminations.
- All shutdown valves
  - of the compressed air inlet and outlet valves installed by the owner
  - in the bypass line (if available)

  are closed.
- The dryer is correctly sited and installed.

Checks before start-up

Ensure that

- all pipe, cable and fastener connections on the dryer have been retightened,
- no pipes chafe against body edges,
- all mountings are perfectly secure,
- the electrical connections are in safe contact and in good condition,
- owner-end and pressurised parts such as safety valves or other devices are not blocked up by dirt or paint,
- all compressed air system parts which are pressurised (valves, hoses etc.) are free from wear symptoms and defects.

Setting times of the operating phases

In its standard version, the dryer is delivered with a time-dependent control system. The phase sequence occurs in a fixed cycle.

With the optional dewpoint-sensing control, the dryer can also be operated at variable cycles (depending on the dewpoint).

The following table provides information on the duration of the individual phases.

Phase duration	Fixed cycle		Variable cycle	
Adsorption	5	min	30	min, maximum
Regeneration, total	5	min	5	min
– of which: expansion time	~ 0.2	min	~ 0.2	min
– of which: dehumidification time	~ 4	min	~ 4	min
– of which: pressure build-up	~ 1	min	~ 1	min
Standby	—		~ 25	min, maximum

Emergency shutdown

In the event of an emergency, shut down the dryer as described on page 36.

Start up dryer

Warning against sudden air ejection!

During expansion the pressure is released suddenly through the silencer:

- **A loud cracking noise occurs which can injure your hearing.**
- **Particles carried in the air flow act like bullets and can injure your eyes or skin.**

Always wear eye and ear protection, therefore, when you are in the vicinity of the dryer!

Hazard due to a sudden release of pressure!

Never remove any parts of the dryer, or manipulate the same in any way, for as long as the plant is still pressurised! A sudden escape of pressure may cause serious injuries.

Before carrying out any work on the dryer, first depressurise the plant.

- The more powerful the dryer is, the more noise may be generated during operation. Therefore, the operator must provide suitable protective equipment (e. g. ear protection).
- Only operate the dryer within the permissible limits. By operating the dryer in conditions for which it has not been designed, functional faults may be caused.
- Depending on the size of the dryer and the compressed air network and the respective legal requirements in your country, it may be necessary to perform initialisation according to the directive for pressure equipment 2014/68/EU.

- Check the dryer regularly for externally visible damage and defects. Any changes, even in its operating behaviour, must be reported immediately to the competent office or person.
- In the event of an emergency or if a safety-relevant disruption occurs (e.g. escaping compressed air, defective component), the dryer must be shut down immediately as described on page 36). The unit may only be restarted after all defects have been eliminated.

Open compressed air supply and switch on dryer

For start-up, please proceed in the sequence shown here.

- ► Ensure that the compressed air inlet and outlet valves installed by the owner are closed (see installation example on page 24).
- ► Ensure that the compressed air system upstream of the dryer is pressurised.
- ► Switch on dryer by setting the ON/OFF switch to **I**. This will initiate the C-HDD-N control valve to be in such position that ONE vessel is pressurised, and THE OTHER vessel is at atmospheric pressure.

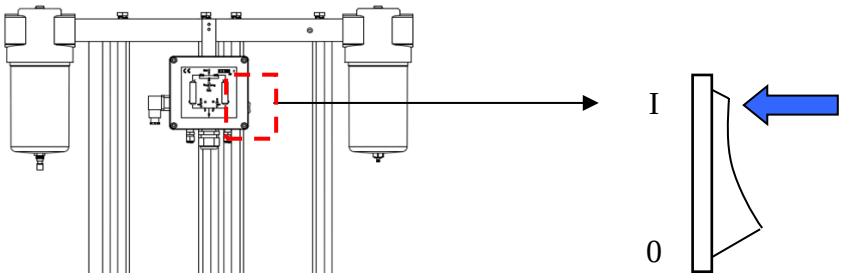

Slowly open compressed air inlet valve!

Avoid sudden pressure build-up in any circumstance! If pressure builds up too fast, this may cause damage to the dryer. Therefore, the compressed air inlet valve must always be opened quite slowly!

- ► Slowly open the compressed air inlet valve, installed by the owner, upstream of the dryer.
- ► If the dryer is taken into operation for the first time, or after a change of drying agent, the following intermediate step is recommended. In the case of a restart situation, the following intermediate step can be skipped.

Operating the dryer for the first time (or after a change of drying agent) separately

Depending on the transportation and storage conditions, the drying agent in the vessels can already be loaded with humidity from the environment. At each first start-up, it makes sense therefore to operate the dryer for some time separately from the compressed air system. This causes the drying agent in each vessel to be regenerated repeatedly and thus to be prepared optimally for the take-up of humidity.

> **Note:**
>
> **Depending on the pressure dew point to be achieved, we recommend to operate the dryer at first start-up without compressed air consumption:**
>
> - **for at least 4 hours at a pressure dew point of –25 to –40 °C or**
> - **for approx. 3 to 5 days at a pressure dew point of –70 °C.**

If you wish to take the dryer into operation in accordance with our recommendation, proceed as follows:

- ► Ensure that the compressed air outlet valve installed by the owner is closed.
- ► Keep the compressed air outlet valve closed for the time period recommended above.
- ► Then the dryer can be taken into service in the compressed air system as described in the following section:

Operate dryer immediately in the compressed air system

- ► Ensure that the compressed air system downstream of the dryer is pressurised or that a start-up device (option, see page 17) was installed into the compressed air system directly downstream of the dryer.
  The importance of this increases with the size of the compressed air system downstream of the dryer. Smaller compressed air systems can be pressurised also by means of compressed air fed through the dryer.

Slowly open compressed air outlet valve!

Avoid a sudden drop in pressure in any circumstance! If pressure drops too fast, this may cause damage to the dryer. Therefore, the compressed air outlet valve must always be opened quite slowly!

- ► Slowly open the compressed air outlet valve installed by the owner. The pressure should not drop below the operating pressure (if possible.). If necessary, keep the compressed air outlet valve in a slightly open position until the compressed air system downstream of the dryer has filled up completely; only then should the valve be opened fully.

The dryer can then be taken into operation within the compressed air system.

In the event of a fault

In the event of an emergency or if a safety-relevant disruption occurs (e.g. escaping compressed air, defective component), the dryer must be shut down immediately as described on page 36).
Then proceed as follows:

Remedy fault

- ► Look up possible cause of the fault, and how to remedy the same, in the table on page 52.
- ► Remedy fault.
- ► Repeat the start-up procedure.

Changing Cycle Mode (Optional)

When *can* I change cycle mode?

If the dryer has been successfully commissioned and is equipped with the following option:

- *compressor synchronisation*
- *dewpoint-sensing control*

it can be set to *Economy Cycle* mode.

When and how *should* I change cycle mode?

Cycle changes should be made:

<u>During the pressure build-up phase AND prior to vessel switchover</u>

During this phase, the pressure in both vessels is just below operating pressure so that a fast pressure build-up is prevented when the vessels are switched. During this period, ONLY the adsorption LED is lit on the controller.

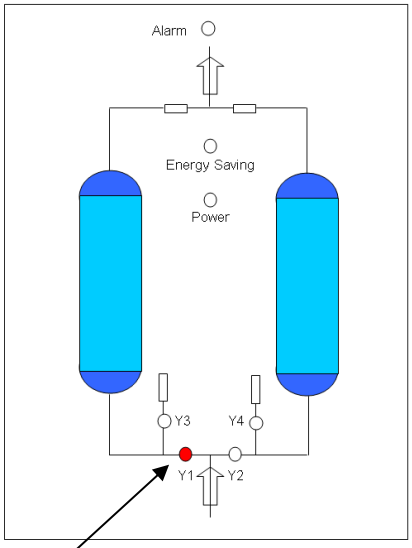

OR

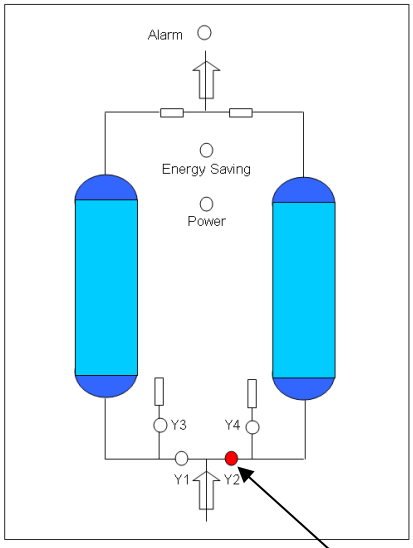

Only this LED is lit during pressure build up stage

Only this LED is lit during pressure build up stage

and the digital display shows step 4 or step 9 for the duration of 1 minute (see logic control diagram; not displayed with dewpoint sensing).

Which cycle modes can I choose?

The dryer can run in **two different cycles**. Firstly, **fixed cycle**, where the changeover of the towers is purely time-based. Secondly, **dewpoint-dependant cycle**, where the switching of the tower is based on a set changeover point.

With Compressor Synchronisation (Optional)

If compressor synchronisation is enabled, the dryer can only be operated in conjunction with the compressor. As soon as the compressor is switched off, the dryer is automatically set to standby mode.

In standby mode, the control system remains running, and the dryer prepare itself ready for the next switchover, which is made as soon as the compressor is switched on.

With Dewpoint-Sensing Control (Optional)

Dryers equipped with dewpoint-sensing control operated in variable cycle mode, based on the measured dewpoint of the dried air at the compressed air outlet. As soon as a certain dewpoint is reached, as the drying agent in the absorbing vessel is saturated, the vessels are switched.

The dewpoint at which a switchover is made is preset at the factory.

How do I change cycle mode?

The cycle mode can be changed via the Protected Setting Mode, described in the next section.

Protected Setting Mode

What is protected setting mode?

Protected setting mode is a setting mode which allows service personnel to modify the system settings. This setting mode is intended only to be accessed by service personnel.

How to use the protected setting mode?

Protected setting mode can be entered by the following steps:

1. Turn off the power to the control board.
2. **Remove AC-in (Con402) connector to eliminate the presence of AC voltage on the control board.** It is recommended to remove all other connectors on the control board as well. However, Con401 is required to stay connected in order to power the control board.

Warning! Always ensure personal safety by wearing adequate protective gears and exercise due care when working around the presence of AC voltage. AC voltage can be lethal.

3. Press and hold SET button switch (SW101) while turning on the power to the control board.
4. At this stage, the Alarm LED (Red LED) will turn on indicating the SET button switch is held pressed.
5. Release the SET button switch (SW101), the display will show S--- indicating that the control board is ready to enter protected setting mode.
6. Press the SET button switch (SW101) to enter protected setting mode, the display will show S-00. The number after S- represents the parameter number.

   Refer to Table 1 for the interpretation of parameter numbers.
7. Press the UP button switch (SW201) or DOWN button switch (SW202) to scroll through the parameter number until the desired parameter number is shown on the display.
8. Press SET button switch (SW101) to select the desired parameter, the display will show =000 or some other numerical number. The numerical number after = represents the value of the selected parameter.

   Refer to Table 1 for the interpretation of the parameter's value.
9. Press the UP button switch (SW201) or DOWN button switch (SW202) to modify the value of the selected parameter.
10. Press SET to save the value for the parameter, the display will return to parameter selection and show the parameter number.
11. Repeat steps 6 to 10 until all the desired parameters are modified.
12. When done, wait for 30 seconds or turn off the power to the control board. Note: In protected setting mode, the control board will automatically reset if there is no button switch press for a period of 30 seconds.

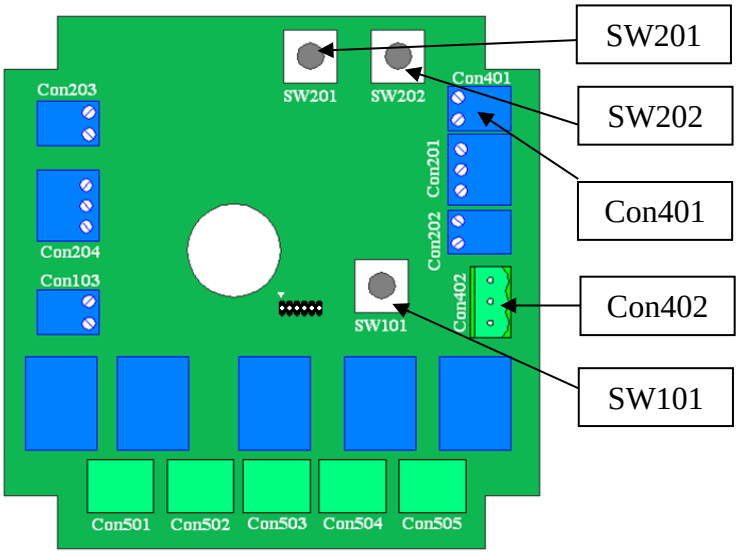

Table 1, interpretation of parameter number and value				
Parameter number	**Name**	**Value**	**Description**	**Default value**
S-00	Modbus address	000 to 147	Modbus node address	001
S-01	Modbus baud rate	000	1,200 bps	004
		001	2,400 bps	
		002	4,800 bps	
		003	9,600 bps	
		004	19,200 bps	
		005	38,400 bps	
S-02	Modbus number of data bit	008	Always 8 bits	008
S-03	Modbus parity bit	000	No parity bit	002
		001	Odd parity bit	
		002	Even parity bit	
S-04	Modbus character timeout	000 to 010	Number of half-character time + 3 half-character time	001
S-05	Modbus respond delay	000 to 100	0 to 100ms	050
S-06	Dryer operation mode	000	Idle	001
		001	Fix mode	
		002	Variable mode	
S-07	Dew point range	000	-50°C to +20°C	000
		001	-100°C to +20°C	
S-08	Service timer (countdown)	000	4000 hours	000
		001	8000 hours	

Monitoring dryer operation

The dryer operates fully automatically. However, you should carry out the regular checks described in the Chapter *Maintenance and repair of the dryer*.

Warning against sudden air ejection!

During expansion the pressure is released suddenly through the silencer:

- **A loud expansion noise is caused which may damage your hearing.**
- **Particles carried in the air flow act like bullets and can injure your eyes or skin.**

Always wear eye and ear protection, therefore, when you are in the vicinity of the dryer!

Operating hours counter and service intervals

The dryer control unit has an operating hours counter.
Depending on the version and application, this is set to 4,000 or 8,000 operating hours and appears as a countdown on the display of the HDC2 control unit.
Once the set operating hours have elapsed, the display indicates that the system requires servicing as recommended by the manufacturer.

Important: The function of the appliance is not affected by this message at any time and only serves to ensure process reliability.

The counter is reset using a service dongle. The dongle and the instructions are part of AFE's official spare and maintenance parts delivery programme.
Further details can be obtained directly from the manufacturer or your service partner

With Dewpoint-Sensing Control (Optional)

Display of dewpoint

If the dryer is equipped with a dewpoint-sensing control system, the digital display at the front of the switchbox will alternate between the measured dewpoint and a service countdown timer (hours).

When the timer reaches 0, it changes to “SEr" indicating service is required. The dryer is to be serviced and maintained. After that, the timer can be reset using a service dongle that can be obtained from the manufacturer (see page 5).

Depending on the sensor installed, the display range for dewpoint is either -50 °C (-58 °F) to +20 °C (68 °F), or –100 °C (-148 °F) to +20 °C (68 °F).
If the set dewpoint is exceeded, the system automatically completes a switchover between the vessels. The dewpoint at which a switchover is made is preset at the factory.

► After commissioning or extensive maintenance work, check the dewpoint display at the dryer.

Under certain circumstances, the desired dewpoint is only reached after prolonged operation.

Error messages

If the measured dewpoint exceeds the preset alarm limit +6 °C (42.8 °F) above the switchover value, the displayed dewpoint value will be in flashing condition. In addition, an error message can be issued through the potential-free busbar.

Error codes and their causes:

Display	Cause
Blinking with current dew point reading	■ Upper measuring range limit exceeded
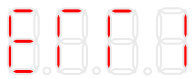	■ Dewpoint sensor defective ■ Dewpoint sensor not powered ■ Cable defective ■ Sensor defective

For instructions on how to eliminate faults, see chapter *Identify and eliminate faults*

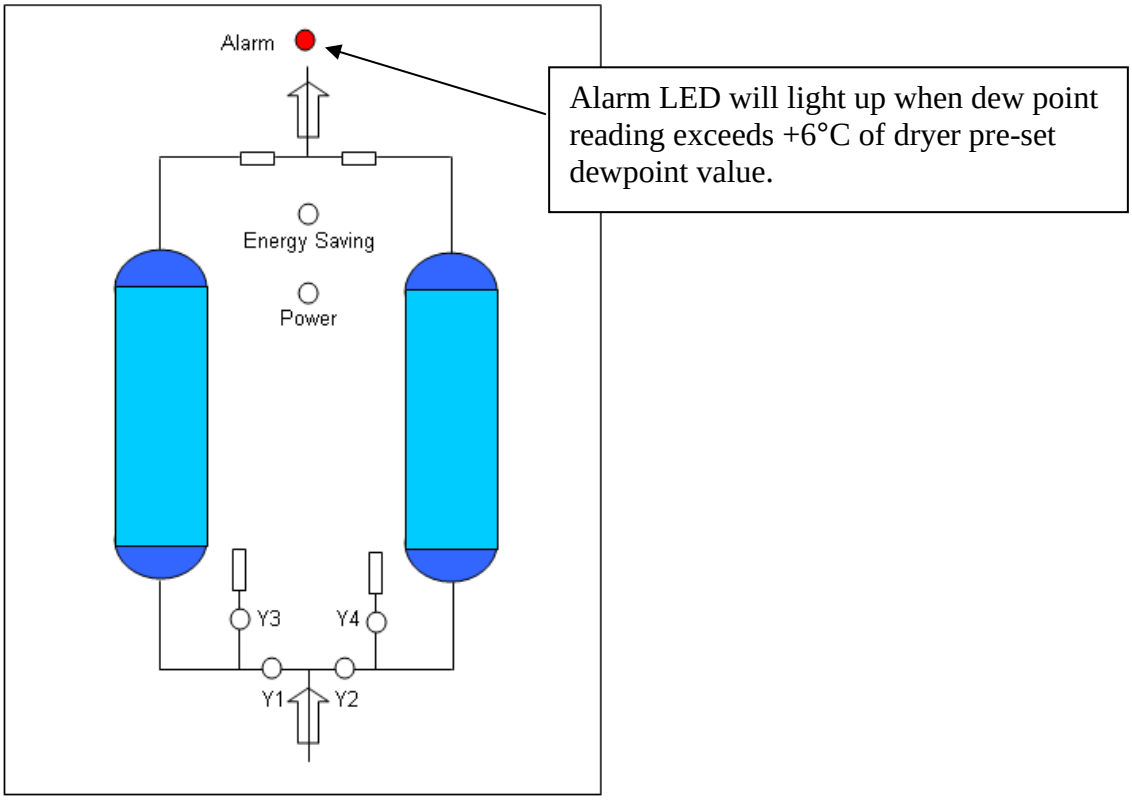

Monitoring via MODBUS RTU

The dryer settings, operation status and measured dewpoint may be monitored remotely via MODBUS RTU. For configuration and settings, refer to the MODBUS RTU Register Map in the Annex of this manual.

Shutdown and restart dryer

In the following cases, the dryer must be fully shut down and depressurised:

- In the event of an emergency or malfunction
- For maintenance work
- For dismantling

Risk of injury from escaping compressed air!

Never remove any parts of the dryer, or manipulate the same in any way, as long as the unit is pressurised! Suddenly escaping compressed air might cause serious injuries.

Prior to any work, release all pressure from the unit.

Note:

If the unit is equipped with a compressor synchronisation system, first switch off the compressor and then wait until the dryer has reached the standby phase before switching it off with the ON/OFF switch.

This ensures that the regeneration cycle is completed, and that the pressure in both vessels is at the same level.

Note:

As soon as the dryer is switched on again, the programme continues the cycle from the point at which it has been stopped.

Emergency shutdown

In any emergency proceed as described in the next section.

Depressurising and shutting down the dryer

In order to make the dryer safe, follow the instructions in the next three sections:

Disconnect dryer from compressed air system

- ► Close the compressed air outlet valve (provided by owner).
- ► Close the compressed air inlet valve (provided by owner).
- ► If installed: Open bypass line.

Depressurise dryer

- ► Leave the dryer on until the expansion phase in both vessels has been completed.

During the expansion phase, the vessels are completely depressurised.

Disconnect voltage supply

► Switch off the dryer by setting the ON/OFF switch to position **0**.

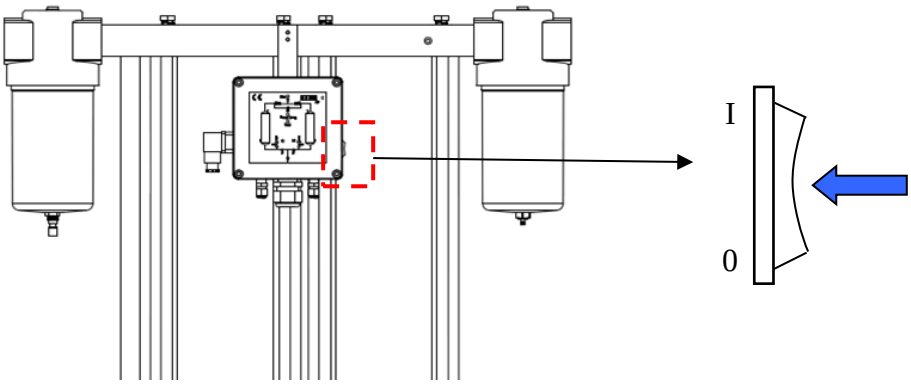

If work is to be carried out on the electrical system

► Depressurise and shut down the dryer, following the instructions in the above chapter.

Risk of injury due to voltage-carrying parts!

The electrical supply cable and external power lines are live even after the dryer is switched off and, in the event of body contact, may cause serious injury! Before carrying out any work on the electrical system, the electrical supply cable and all external power lines must be made voltage-free!

► Make the electrical supply cable to the dryer voltage-free.

► Secure the electrical supply cable to the dryer against switch-on.

Restart

Depending on the fittings installed by the operator and the actual pressure conditions, the unit might have to be restarted at operating pressure. The following general rules apply:

- When switched off, the dryer is blocked in the main flow direction.
- The pressure in the vessel drops (provided that the compressed air outlet valve provided by the operator is opened), if
  - compressed air can escape to the compressed air system,
  - the dewpoint-sensing control is implemented.

If compressed air system and dryer have remained at operating pressure

► Ensure that the compressed air inlet valve (provided by the owner) is open.

► Set ON/OFF switch to **I**. The programme continues the cycle from the point at which it was interrupted.

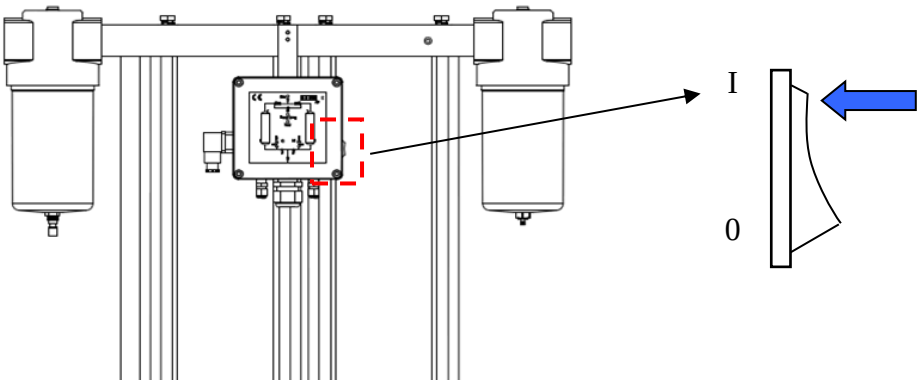

Slowly open compressed air outlet valve!

Avoid a sudden drop in pressure in any circumstance! If pressure drops too fast, this may cause damage to the dryer. Therefore, the compressed air outlet valve must always be opened quite slowly!

► **Slowly** open the compressed air outlet valve installed by the owner. If necessary, keep the compressed air outlet valve in a slightly open position until the compressed air system downstream of the dryer has filled up completely; only then should the valve be opened fully.

► If available, block off bypass line.

The dryer is now in operation again and operates fully automatically.

If compressed air system and dryer have not remained at operating pressure

► If disconnected, reconnect the voltage supply of the dryer.

► Pressurise and switch on the dryer as described in the section *Open compressed air supply and switch on dryer* on page 28.

The dryer is now in operation again and operates fully automatically.

Maintenance and repair of the dryer

In order to allow maintenance work on the dryer to be carried out efficiently and without danger for maintenance personnel, you should comply with the following instructions.

Notes on maintenance

Warning!

Maintenance tasks may be carried out only by authorized and qualified specialist personnel, and only with the plant in a switched off and depressurised condition.

Note:

In order to ensure perfect maintenance and reliable operation we recommend that you conclude a maintenance contract (For telephone number, see page 5).

When exchange or replacement parts are ordered, always state the dryer type and the build no. of the dryer. These data are found on the type plate attached to the front casing of C-HDD-N, near the controller.

- Carry out all maintenance work only when the plant has been shut down and depressurised!
- Bolt connections must be undone with care! Note ram pressure values! Otherwise emerging media may cause personal injury.
- Do not modify the factory settings of the control system in any way without prior consultation with the manufacturer.
- Never carry out welding work on a vessel or modify the same in any way!
- Following maintenance work, always check all fittings and bolt connections for leakage and secure seating.
- Never leave tools, loose parts or cloths in, at or on the dryer.

Dryer Assembly Mechanism

- Refer to the exploded view drawing below for a better understanding of the C-HDD-N assembly mechanism

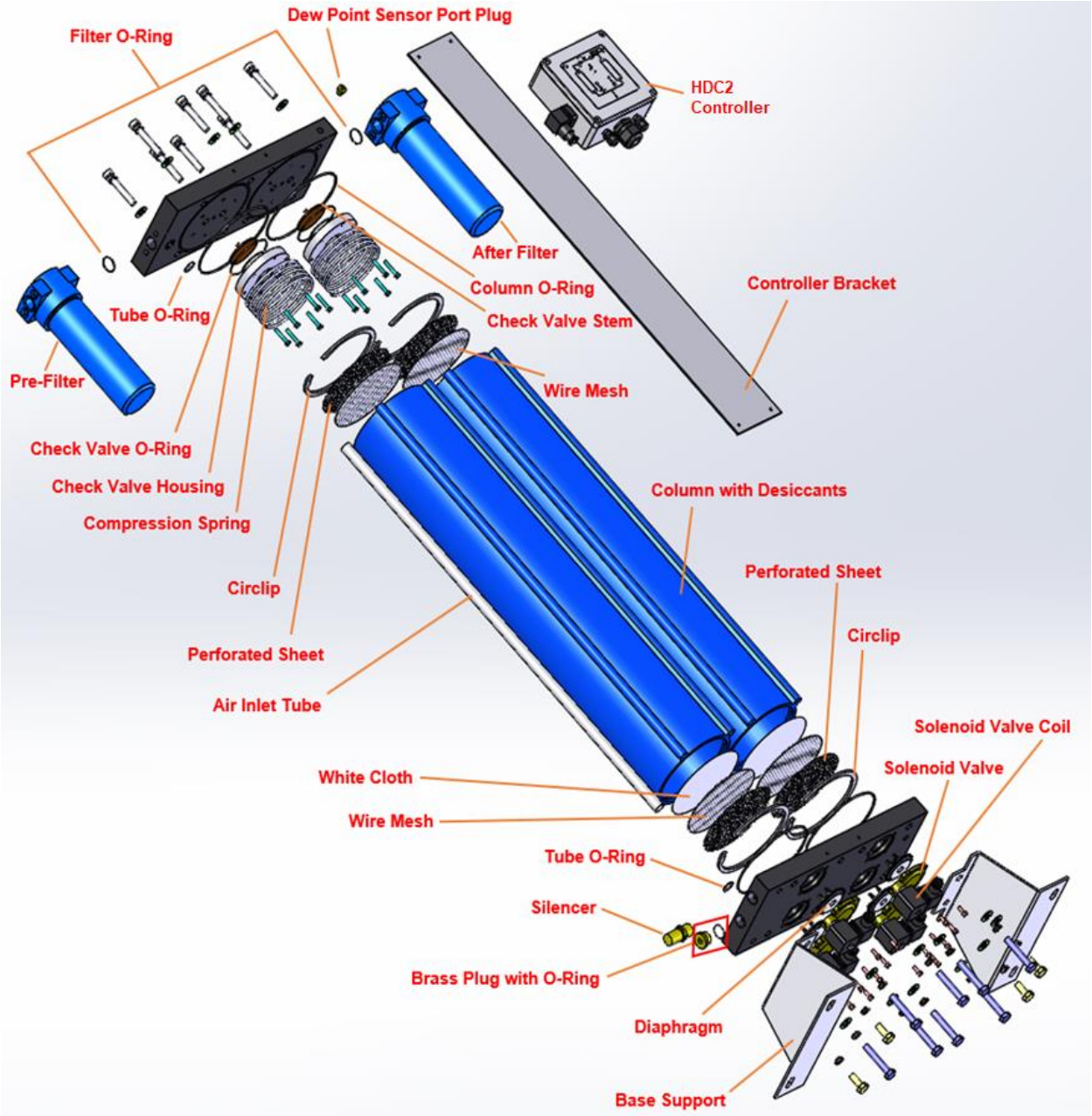

Tools and items required for maintenance works

- Allen keys for DIN 912 Cap Screws size M4, M5, M8, M10, M12
- Circlip Pliers for DIN472 Circlip size B-85, B-140 and B-185
- Vacuum cleaner for removal of desiccants
- Grease

Regular maintenance intervals

Note:

If a vessel has been depressurised, e.g. after completion of the expansion phase, and the pressure remains above 0 bar, the vessel is pressurised by what is known as ram pressure. This might be due to

- **blockage at the silencer(s),**
- **contamination of the dust sieves,**
- **spent drying agent.**

To prevent such malfunctions, regularly service the dryer as described below.

The table provides an overview of the maintenance work to be carried out. The individual tasks are described in the following pages.

Component	Maintenance task to be carried	Maintenance interval						
		daily	weekly	monthly	12 months	24 months	48 months	see page
Complete dryer	Carry out visual and function checks.	▲						42
Upstream and downstream filters	Check function of condensate trap on pre filter. Clean if necessary.			▲				43
	Replace all filter elements and drains after 1 year of operation.				●			43
Silencer	Check for dust/impurities, and clean if necessary.		▲					42
	Replace silencer after 1 year of operation and after renewing the dessicant.				●			43
Dew point sensor (with optional dew point sensing-control	Must be calibrated.				●			
O-Ring Set	Renew.					●		44
Solenoid valves	Replace valve diaphragm every 2 years. Replace solenoid coils when necessary.					●		45
Dust sieves, drying agent	Renew.						●	46

Codes: ▲ Check. ● Renew.

***NOTE: The maintenance interval also depends on the operating hours counter (4,000 or 8,000 hours). Depending on whether the operating hours or the months/time have been reached first, we recommend professional maintenance (see page 63 "List of spare parts and consumables").**

When carrying out any maintenance work, comply with the following safety instructions:

Danger!

There is a very considerable risk of personal injury, when carrying out work on the activated and pressurised dryer.

Before commencing any maintenance tasks always shut down the dryer as described on page 36 !

Warning against electrical voltage!

Only qualified specialist personnel may carry out work on the electrical system!

Daily maintenance tasks

Carry out visual and function check on the complete dryer

- ► Check dryer for external damage or unusual noise generation.
- ► Duly eliminate any defects found.

Clean dryer

- ► Remove any loose dust by means of a dry cloth, and, if required, also by means of a moist and well wrung cloth.
- ► Clean the surfaces with a moist well wrung cloth.

If no compressed air or an unusually large amount of condensate, or no water condensate at all, emerge, you have to remove the condensate trap, clean and if necessary, replace the same. To this end, proceed as follows:

- ► Depressurise the dryer and shut it down (see page 36).
- ► Unscrew the bottom section of the filter housing; remove the condensate trap, clean or fit new condensate trap.
- ► Refit bottom section of the filter housing: first screw on very tightly then unscrew by a quarter turn.
- ► Restart dryer (see page 38).
- ► Recheck function of the condensate trap.

Weekly maintenance tasks

Check and clean silencer from dusts/impurities clogging

- ► Depressurise the dryer and shut it down (see page 36).
- ► Remove silencer and check for any dust/impurities collections within the silencer.
- ► Clean by gently knocking and manually blow off any collected dust/impurities.
  Use pneumatic airgun for best cleaning results.
- ► Restart dryer (see page 38)

Monthly maintenance tasks

Check the function of the condensate trap on the upstream filter

A level-controlled condensate trap is installed at the upstream filter. The condensate trap drains the condensate automatically whenever a predefined fill level is reached. This trap prevents that the humidity separated from the filter ingresses into the dryer and has a detrimental effect on the drying agent.

Check the condensate trap as follows:

If no compressed air or an unusually large amount of condensate, or no water condensate at all, emerge, you have to remove the condensate trap, clean and if necessary, replace the same. To this end, proceed as follows:

- ► Depressurise the dryer and shut it down (see page 36).
- ► Unscrew the bottom section of the filter housing; remove the condensate trap, clean or fit new condensate trap.
- ► Refit bottom section of the filter housing: first screw on very tightly then unscrew by a quarter turn.
- ► Restart dryer (see page 38).
- ► Recheck function of the condensate trap.

Maintenance work to be completed every 12 months (or after reaching the operation hours)

Renew filter elements on the filters

The filter elements must be replaced every 12 months.

- ► Depressurise dryer and take out of service (see page 36).
- ► Remove the bottom section of the filter housing
- ► Replace filter element.
- ► Refit bottom section of the filter housing: first screw on very tightly, and then unscrew by a quarter turn.
- ► Dispose off used filter element in accordance with the applicable regulations.
- ► Restart dryer (see page 38). Check the filters for leaks.

Renew silencers

The dryer is equipped with a silencer. If the silencer becomes blocked, a dam pressure is generated which in extreme cases may cause the silencer to burst.

Hazard caused by blocked silencer!

Blocked silencers can cause a dangerous overpressure to build up which may cause the silencers to burst. Flying fragments may cause personal injury and damage to property.

Therefore, the silencers must be cleaned weekly and replaced every 12 months and after each change of desiccant.

Renew silencer

► Depressurise the dryer and shut it down (see page 36).

► Unscrew silencer as shown in the illustration.

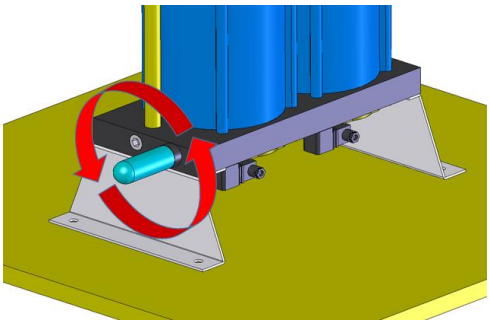

► Replace silencer and secure it.

► Restart dryer (see page 38).

Resetting the operating hours counter via service dongle

(see also instructions in the service kit)

Maintenance work to be completed every 48 months (or after reaching the operation hours)

Replace O-Ring Set

The o-rings for C-HDD-N are recommended to be replaced every 2 years.
Each dryer consists of below o-rings. Refer Dryer Assembly Mechanism at page 40 to locate the o-ring positions:

- 4 pcs Column o-rings
- 2 pcs Air Inlet Tube o-rings
- 2 pcs Check Valve Housing o-rings
- 2 pcs Check Valve Stem o-rings
- 2 pcs Filter o-rings (pre/after filter)

The o-ring set can be purchased with reference to the spare parts list in page 61.

Before attempting to tighten any parts for sealing, always ensure the o-rings are placed properly in their respective grooves. Should there be any difficulties for the o-ring to sit properly in its groove during assembly, applying a small amount of grease in the groove will be useful.

Special attentions are required during o-ring replacements as below:

Check Valve Stem

A small amount of non-corrosive adhesive is recommended to be applied carefully in the groove of the Check Valve Stem o-ring.

This is to prevent any posibilities that the o-ring will dislocate from the groove due to unforeseen internal air turbulence, or due to horizontal handling of the dryer.

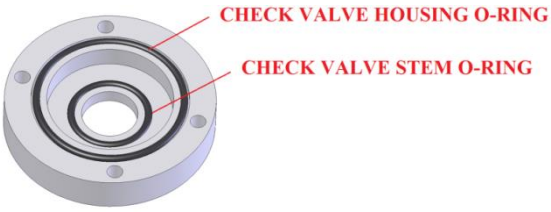

Inlet Air Tube

After the o-rings are place in the top and bottom plate groove accordingly, apply grease on both edges of the tubes.

Any attempts of inserting the metal tube through the o-rings without applying grease, will cause the o-rings to be torn.

Replace Solenoid Valve Diaphragm Set

The solenoid valve diaphragm set for C-HDD-N is recommended to be replaced every 2 years, which for each valve, consists of:

- 1 piece diaphragm
- 1 piece spring

The diaphragm set can be purchased with reference to the spare parts list in page 61.

Replace Solenoid Valve Coil

Should the coil become faulty, change the coil per the recommended steps below.

The solenoid coil can be purchased with reference to the spare parts list in page 61.

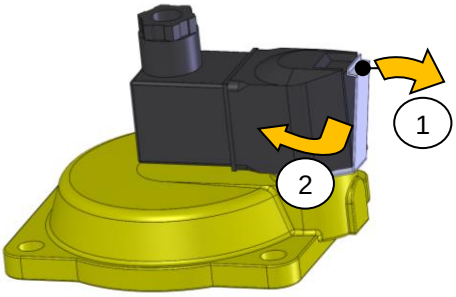

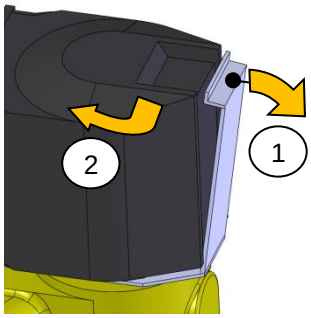

1. Pull and hold the spring clip back, enough to clear the catch.
2. Twist the coil, so that the spring clip is away from its catch.

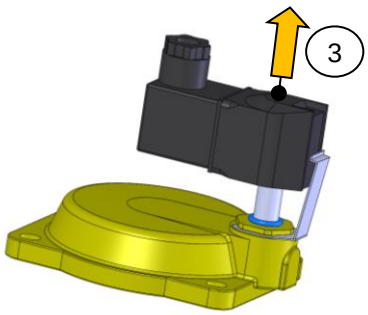

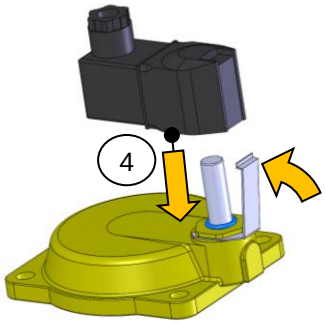

3. Remove the coil from the solenoid valve.
4. Replace with a new coil. Ensure that the spring clip is securely fastened in its catch.

Replace Desiccants and Dust Sieves

To complete the following maintenance tasks, you must dismantle C-HDD-N's top plate and the columns. We therefore recommend that you carry out these tasks together.

> **Note:**
>
> **In accordance with national regulations, a pressure vessel inspection may be prescribed to be carried out at regular intervals by an independent supervisory office.**
>
> **For an inspection of the pressure vessels, the drying agent must be removed as described as follows.**
>
> **When inspecting the pressure vessels, it is recommended to check the condition of all fittings such as e.g. sieve bottoms and dust sieves, including o-rings. If necessary, these fittings must be cleaned or renewed.**
>
> **In the event of comprehensive maintenance or repair tasks, contact the manufacturer (see page 5).**

The service life of the drying agent is usually approximately 3 to 5 years. However, in favourable installation conditions, the change of drying agent may be carried out at a substantially later date (for notes on the installation site, see also page 20).

The change interval depends very significantly from the degree of contamination in the compressed air (or the quality of the compressed air upstream filters). Oil, dust, and dirt particles cover the drying agent surface and reduce its effective surface, in part quite irreversibly.

If in doubt, have a sample of your drying agent assessed by specialists. Send a sample of approx. 200 g to the manufacturer (for address, see page 5).
Comply with the following safety notes when changing the drying agent:

Desiccants are contained in the columns and are secured by dust sieves on both ends of the column. If these dust sieves become blocked, a dam pressure is generated which can cause compressed air fluctuations in the compressed air system.

Hazard due to a sudden release of pressure!
Always check and confirm that the dryer has been depressurised before dismantling. A sudden escape of pressure may cause serious injuries.

Wear eye protection and dust mask due to increased dust generation.
When emptying the drying agent, increased dust generation may occur.
In order to avoid any eye irritations, wear protective goggles!

In order to avoid any dust inhalation, wear dust mask!

Risk of skidding!
If drying agent has been spilt on the floor, there is a risk of skidding caused by the drying agent beads. Therefore, spilt drying agent must always be taken up immediately.

Warning!
If the dryer is not used within specifications, the drying agent can be contaminated with pollutants. Always take this into account for the environmentally safe disposal of the drying agent. The waste code numbers of the drying agent can be obtained from the manufacturer (see page 5).

Dispose of the used drying agent in accordance with all applicable regulations.

- ► Depressurise dryer and take out of service (see page 36).
- ► Unscrew eight cap screws on the Top Plate for detachment.
- ► Using a circlip plier, remove the circlip which is held inside the column's groove. **(NOTE: Circlip by itself exerts a hard force. Becareful when removing from column)**
- ► Remove the perforated sheet and wire mesh under the circlip.
- ► Drain out the desiccants with a vacuum.
- ► When desiccants are completely removed, you will see a piece of white cloth, wire mesh and perforated sheet at the bottom on the column. **(Note: Make sure no desiccants falls into the bottom plate. This will cause the valves to be blocked. If desiccants fall into the bottom plate, remove the valves, and clean it)**

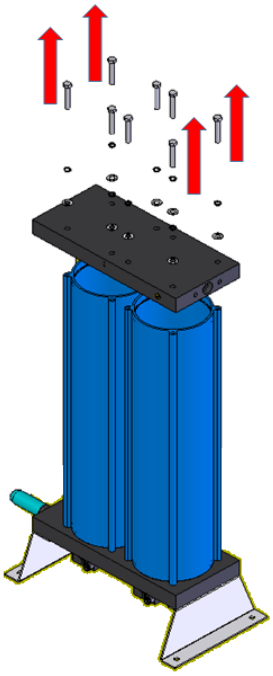

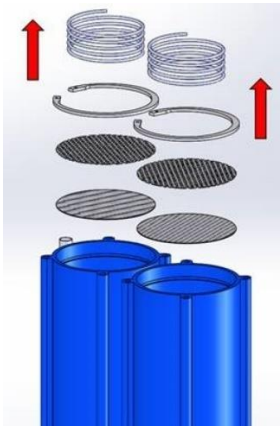

- ► Place the dust sieve layers and circlip back into the column accordingly. **(NOTE: Circlip by itself exerts a hard force. Be careful when placing it into the column)**
- ► For sealing assurance, check and clean the o-rings between vessel column and Top/Bottom Plate. Replace if necessary.
- ► Ensure o-rings did not fall off the groove when mounting the top plate back on the columns. Applying grease on the o-ring will provide a mild adhesion effect to ensure o-ring will not fall off during assembly.
- ► **Apply grease** on the tip of the tube so that it can slide nicely back into the Top Plate. High chance o-rings will be torn if no grease is applied.
- ► Ensure the assembly surface of both the Plates and the Columns are free of dents during maintenance. A dented surface will cause improper O-ring sealing and will result to leakage.
- ► Fasten the eight cap screws. Recommended to first insert 2 cap screws diagonally for positioning. Ensure the balance 6 holes are aligned before tightening.
- ► Restart dryer (see page 38). Check that the connection is leak tight.

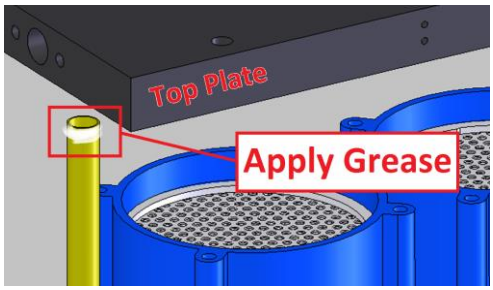

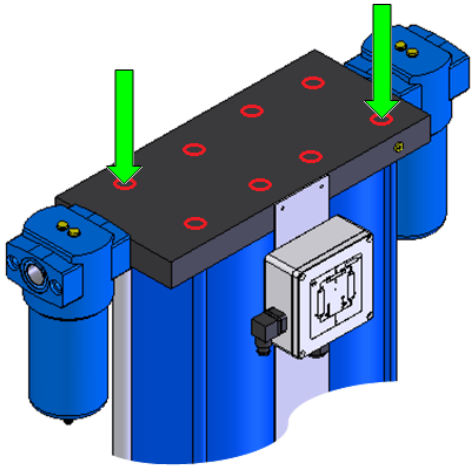

Insert 2 cap screws diagonally for positioning. Ensure the balance 6 holes are aligned before tightening.

Note:

It is advised to follow below recommended tightening torque, to prevent damage on equipment due to over-torque.

DIN931/933 Gr8.8 Cap Screw Size	Recommended Torque (N-m)
M4 x 0.7	1.8~2
M6 x 1.0	5~6
M8 x 1.25	15~18
M10 x 1.50	30~32
M12 x 1.75	48~50

If a proper torque wrench is not available, the operator can manually secure the plate/column assembly manually using only standard allen keys.

The C-HDD-N is designed to have the pressure sealed by means of o-ring compression in its respective grooves, and backed up with spring washers for the cap screws to prevent loosening during operations.

As long as the top plate achieves close fit with the column and the spring washers compressed, it will most guarantee a tight pressure seal for the intended design pressure. A good practise will be to check for leakages during start-up after servicing.

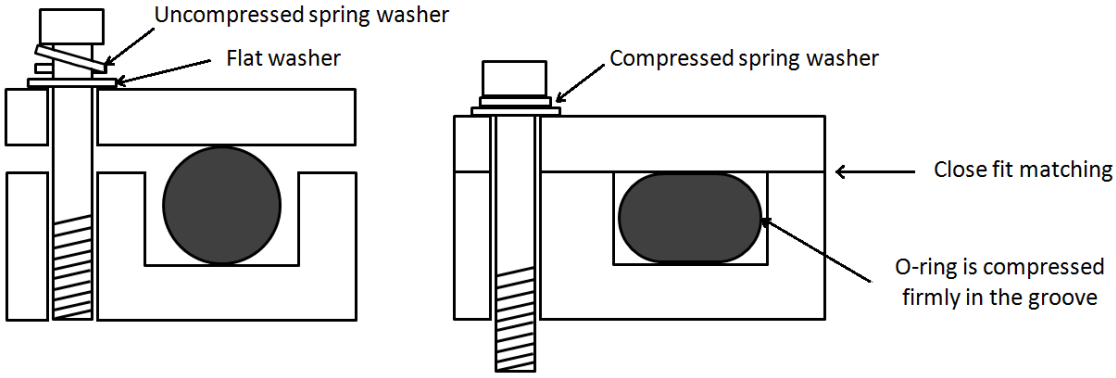

Identify and eliminate faults

The following table provides information on what designatory abbreviations are to be used for the various components. These designations are also found in the technical documentation.

Abbreviation	Component
V1–V2 (Y1–Y2)	Main valves (solenoid valves)
V3–V4 (Y3–Y4)	Expansion valves (solenoid valves)

Summary of faults

There are different fault types. In the case of most electrical faults (e. g. short circuit, defective fuse etc.) the main valves close. In the case of some process faults, the dryer will continue to operate for some time. Faults on the dryer become noticeable e.g. due to unusual noises and dam pressures.

The following table shows who is allowed to remedy a fault: the owner's specialist personnel or the manufacturer's service engineer.

Table of possible faults

Fault	Possible cause	Remedy	Spec. personnel	Service engineer
Excessive dam pressure during regeneration	Silencer or filter element of the silencer is contaminated.	Check silencers or filter elements for contamination, clean if necessary, and possible. renew.	●	●
	Expansion valve V3/V4 does not open correctly.	Check expansion valve for contamination, if necessary, clean/renew.	●	●
	Dust sieves are contaminated.	Clean or renew dust sieves.	●	●
Vessel pressure is too low	Excessive differential pressure on the upstream filter.	Check differential pressure on the upstream filter, if necessary, renew filter element.	●	
No pressure build up	The compressed air system upstream of the dryer is not pressurised.	Check whether the compressed air system upstream of the dryer is pressurised. Remove any faults.	●	
	Solenoid valve Y1/Y2 does not open correctly.	Check supply voltage, cable, contacts and solenoid; replace, if necessary.	●	●
	Solenoid valve Y3/Y4 does not close correctly.	Check supply voltage, cable, contacts and solenoid; replace, if necessary.	●	●
Excessive compressed air consumption	Leakage.	Check condensate trap at the upstream filter; clean, if necessary.	●	●
Dryer does not switch over	Solenoid valve Y1/Y2 does not open correctly.	Check supply voltage, cable, contacts and solenoid; replace, if necessary.	●	●
	Solenoid valve Y1/Y2 cannot be opened properly (audible humming sound or valve flapping).	Check supply voltage. Check pilot valves; replace, if necessary.	●	●
	Control board defective.	Check fuse in supply line and in the switchbox; replace, if necessary.	●	●
	Power supply interrupted, cable broken.	Reconnect the unit to the power supply.	●	
	Compressor might be off.	Check compressor synchronisation circuit.		
	Error in control programme.	Restart programme.		●
No expansion	Solenoid valve Y3/Y4 cannot be opened.	Check supply voltage, cable, contacts and solenoid; replace, if necessary.	●	●
	Solenoid valve Y3/Y4 cannot be opened properly (audible humming sound or valve flapping).	Check supply voltage. Check pilot valves; replace, if necessary. Check valve bodies for contamination; clean or replace, if necessary.	●	●
Dryer is continuously bled	Solenoid valve Y3/Y4 cannot be closed properly (audible humming sound or valve flapping).	Check supply voltage. Check solenoid and diaphragm; replace, if necessary.	●	●
	Main valve Y1/Y2 does not open.	Check main valve, replace if nec.	●	●
Dryer is excessively bled	Solenoid valve Y1/Y2 cannot be closed.	Check solenoid and diaphragm; replace, if necessary.	●	●
Pressure dew point is not reached	Operating pressure is too low.	Increase operating pressure.	●	
	Compressed air volume flow is too high.	Reduce compressed air volume flow	●	

	Compressed air inlet temperature is too high.	Reduce compressed air inlet temperature or pre-connect a compressed air cooler.	●	●
	Control board is defective.	Check control board, renew if necessary.		●
	Differential pressure on the upstream filter is too high.	Check differential pressure on the upstream filter, renew filter element if necessary.	●	
	Condensate trap on the upstream filter does not work.	Check function of the condensate trap, clean or renew if necessary.	●	●
	Drying agent is contaminated or too old.	Check upstream filter for contamination, renew element if necessary.	●	
		Check drying agent for contamination, renew drying agent if necessary.	●	●
	Regeneration gas too low.	Check function of expansion valve V3/V4 and silencer, renew silencer or filter element if necessary.	●	●

Annex with technical documentation

This annex comprises the following information and technical documentation:

- Logic control diagram
- P&ID
- MODBUS RTU Register Map
- Dimensional drawing
- Replacement and consumables list

Logic control diagram

Adsorption in B1 and regeneration in B2

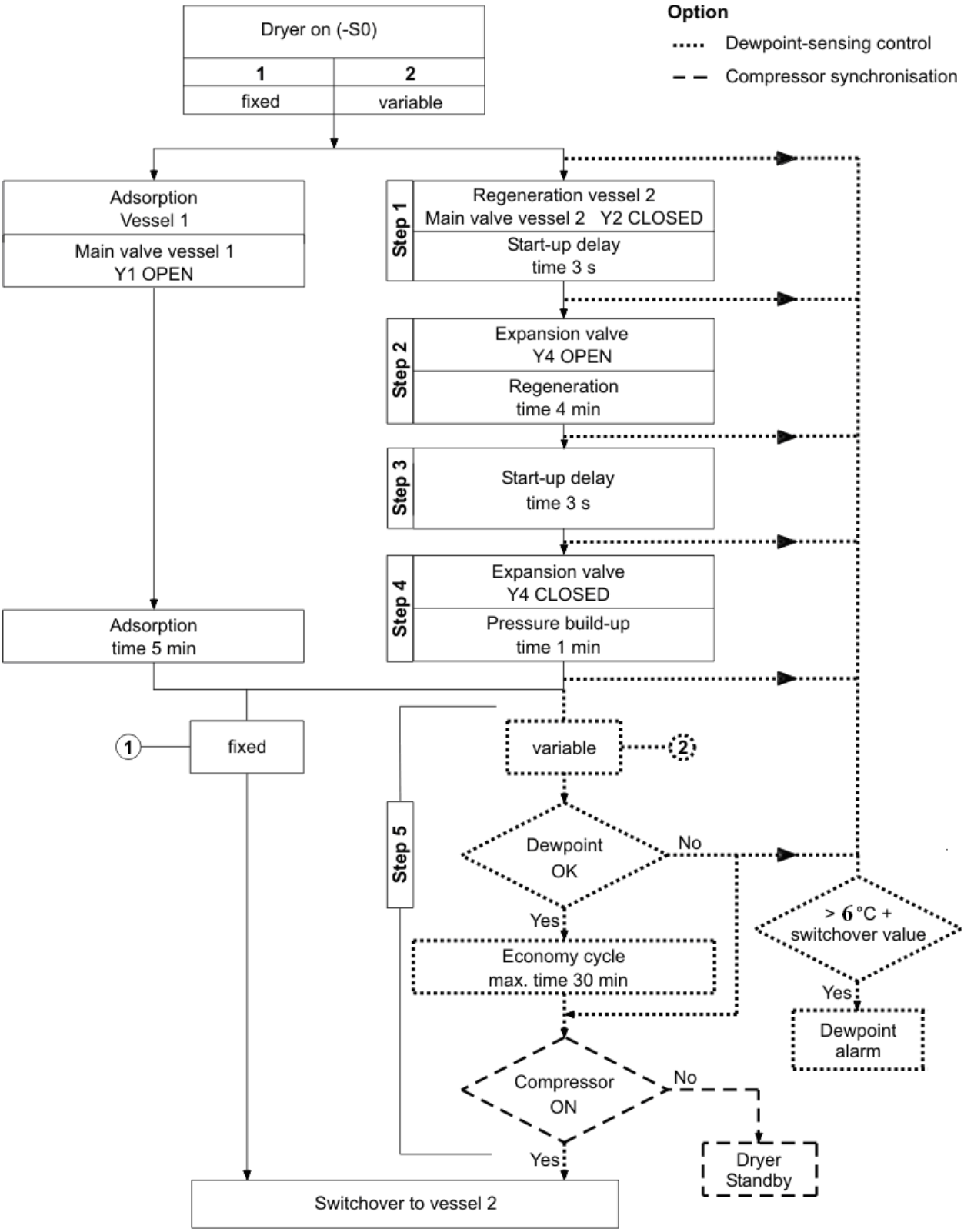

Regeneration in B1 and adsorption in B2

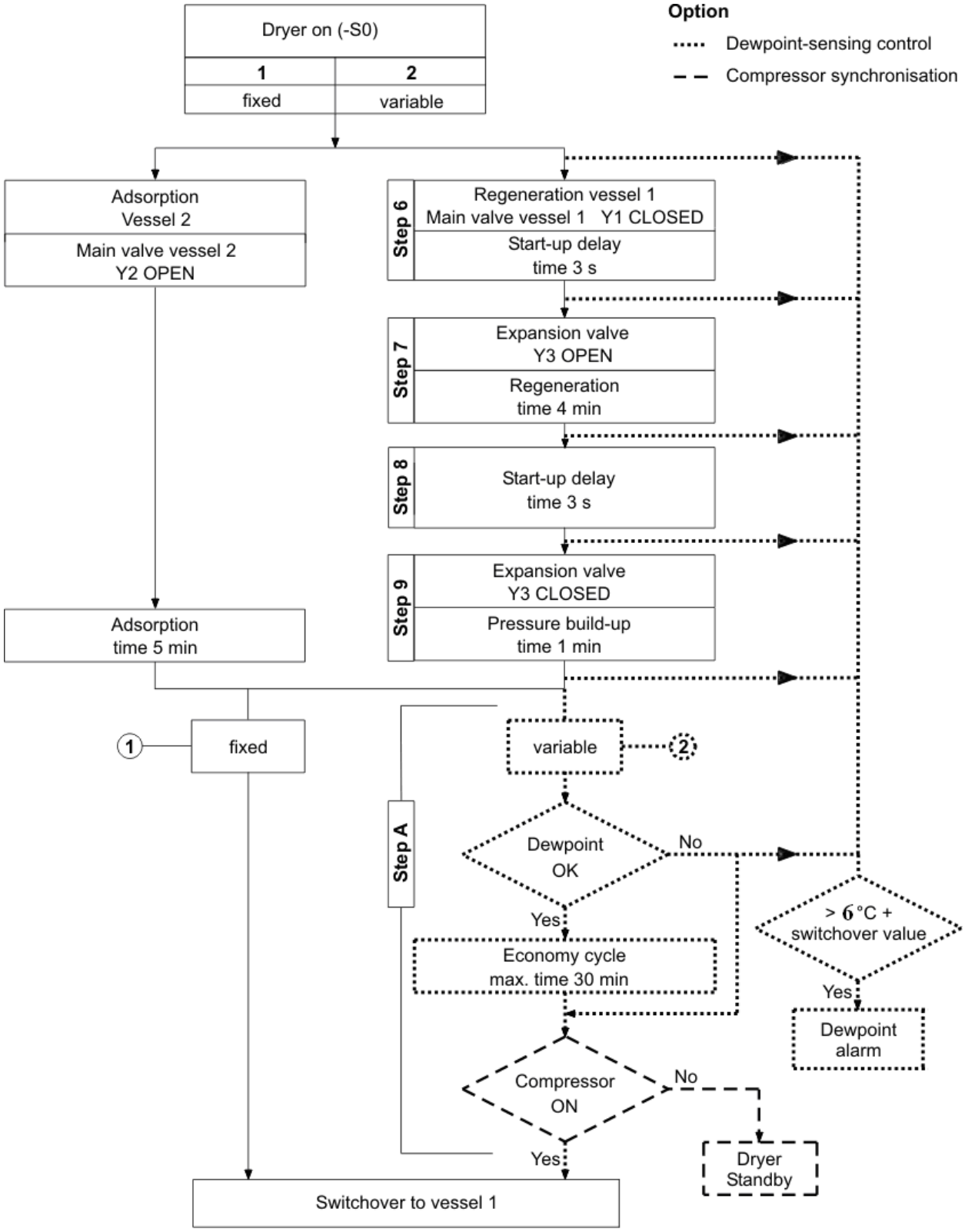

P&ID

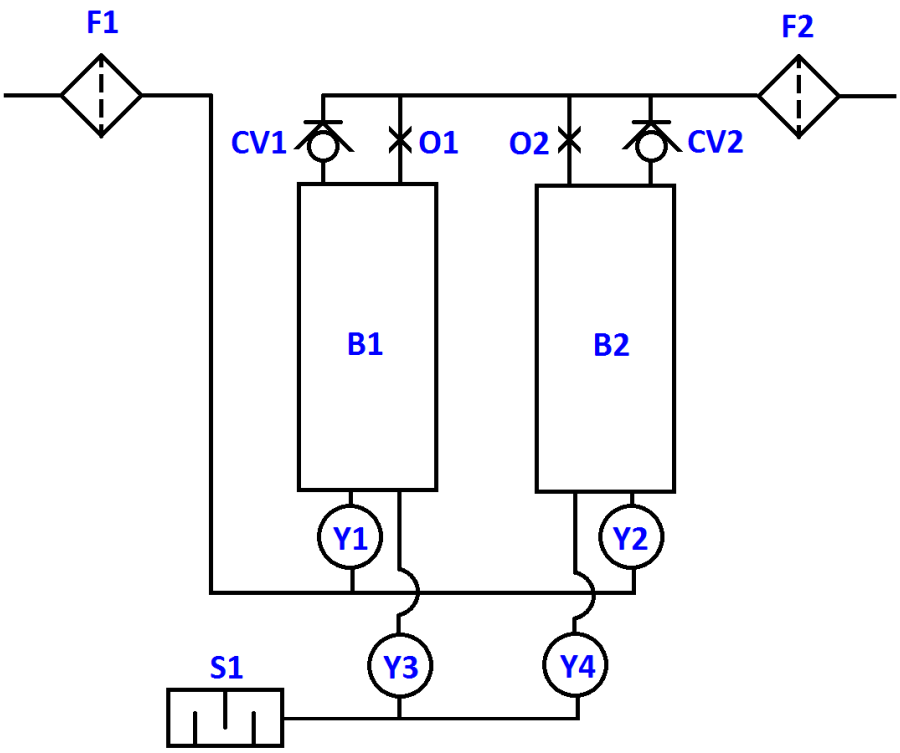

Pos.	Designation
F1	Pre-Filter
F2	After-Filter
CV1	Built-in Check Valve for B1
CV2	Built-in Check Valve for B2
O1	Built-in Orifice for B1
O2	Built-in Orifice for B2
S1	Silencer

Pos.	Designation
B1	Desiccant Filled Vessel
B2	Desiccant Filled Vessel
Y1	Control Valve for B1
Y2	Control Valve for B2
Y3	Exhaust Valve for B1
Y4	Exhaust Valve for B2

MODBUS RTU Register Map

Modbus RTU default configurations:
Baud rate : 19,200bps
Data bit : 8
Parity bit : even
Stop bit : 1

Note: When no parity is used, there shall be 2 stop bits.
When odd or even parity is used, there shall be only 1 stop bit.

Modbus RTU function code implemented:
1) Function code 3 - read multiple holding registers
2) Function code 4 - read input registers

Notes:
Quantity of register must not exceed 11.
Total number of bytes in a Modbus message frame must not exceed 31.

Register name	Register address		16-bit word	
	Hexadecimal	Decimal	High byte	Low byte
Register segment 0				
Dew point sensor value (x 0.1mA)	0x0000	0	0x00	0 : Sensor not detected 4..200 : 4 to 20.0mA
Dew point sensor range (x 0.1°C)	0x0001	1	0x00	0 : -50.0°C to +20.0°C, 1 : -100.0°C to +20.0°C
Dew point reading (x 0.1°C)	0x0002	2	-1000..+200 : -100.0°C to +20.0°C -32768 : Sensor fault	
Drying Operation Status	0x0003	3	0x00	1) : Adsorption V1 (Y1 LED), 2) : Quick pressurization valve (Power LED), 4) : Energy saving (Energy Saving LED), 8) : Dew point alarm (Alarm LED), 32) : Regeneration V1 (Y3 LED), 64) : Regeneration V2 (Y4 LED), 128) : Adsorption V2 (Y2 LED, 16 : Reserved

Drying cycle selection	0x0004	4	0x00	0 : Idle, 1 : Fixed cycle, 2 : Dew point cycle
Time to next service (second)	0x0005	5	0..65535 : Time to next service (high word)	
	0x0006	6	0..65535 : Time to next service (low word)	
Cycle time program	0x0007	7	0x00	1..7 : Program 1 to program 7
Due point setting (x 0.1°C)	0x0008	8	-490..+200 : -49.0°C to +20.0°C when dew point sensor range (register 1) = 0 -990..+200 : -99.0°C to +20.0°C when dew point sensor range (register 1) = 1	
Dryer state	0x0009	9	0x00	0 : Idle state 1 : Overlapping state 2 : Pre-regeneration (step 1) 3 : Regeneration (step 2) 4 : Post regeneration (step 3) 5 : Refilling state (step 4) 6 : Energy saving state (step 5) 7 : Standby state
Cycle time counter (second)	0x000A	10	0x00	0..9999

Rev 3.0, 1 July 2022

Dimensional drawing

Model	H (mm)	W1 (mm)	W2 (mm)	D1 (mm)	D2 (mm)	Weight (kg)	Connection
C-HDD-N002	420	366	245	226	106	19	G 1/4"
C-HDD-N004	670	366	245	226	106	24	G 1/4"
C-HDD-N007	920	366	245	226	106	30	G 1/4"
C-HDD-N010	1120	366	245	226	106	34	G 1/4"
C-HDD-N015	992	550	375	273	160	58	G 1/2"
C-HDD-N020	1242	550	375	273	160	69	G 1/2"
C-HDD-N030	1036	755	495	338	220	109	G 1"
C-HDD-N045	1386	755	495	338	220	133	G 1"

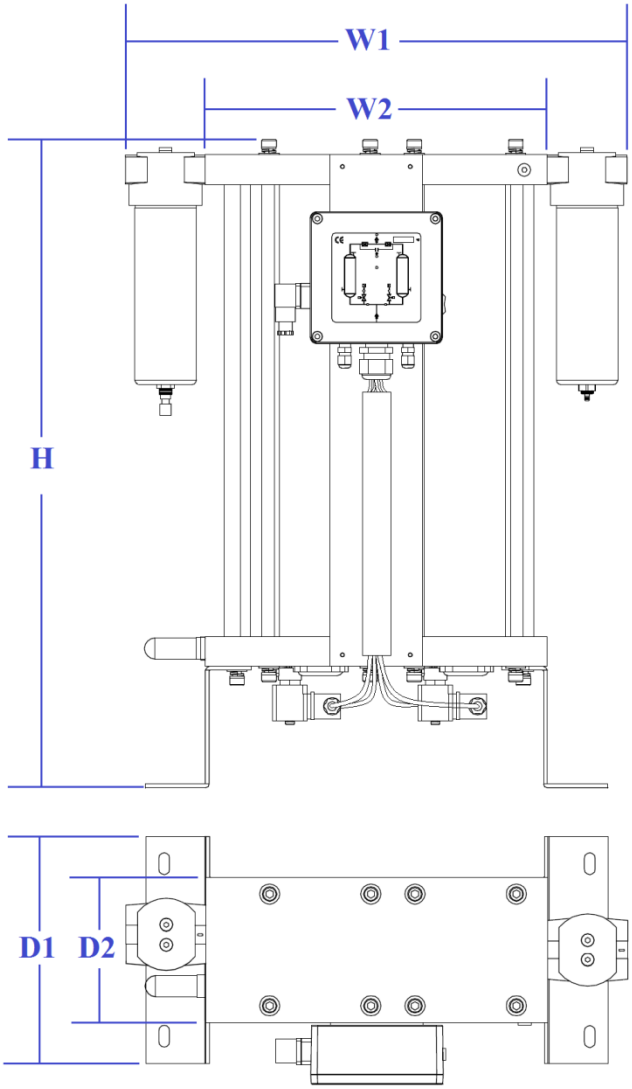

Replacements and Consumables List

No. / *Nr.*	Component Description / *Komponentenbeschreibung*	C-HDD-N Model								AFE Part Code / *AFE Teilecode*	Maintenance interval (months) / *Wartungsintervall (Monate)*	AFE Service Kit
		002	004	007	010	015	020	030	045			
(1)	Activated Alumina AA (kg) / *Aktiviertes Alumina AA (kg)*	1,6	3,6	5,6	7,2	16,3	21,7	29,6	43,3	Desiccant AA 4-6	48	Adpac-48 (add. to SK48-CHDD-NG if used without TPS or with LCS217 – 50°C)
(1 opt.*)	Desiccant MS4 (kg) / *Trockenmittel MS4 (kg)*	1,6	3,6	5,6	7,2	16,3	21,7	29,6	43,3	Desiccant MS4	48	Adpac-48 (add.. to SK48-CHDD-NG if used without TPD or with LCS410 – 100°C))
	Service Dongle	✓	✓	✓	✓	✓	✓	✓	✓	Dongle HDC2	12, 24, 36, 48, …	SK12/48-CHDD-NG002-010 SK12/48-CHDD-NG015-020 SK12/48-CHDD-NG030-045
(2)	Pre Filter Element / *Vorgeschaltetes Filterelement*	✓	✓	✓	✓					EZ1030H-FAAE	12, 24, 36, 48, …	SK12/48-CHDD-NG002-010
						✓	✓			EZ1140H-FAPE	12, 24, 36, 48, …	SK12/48-CHDD-NG015-020
								✓	✓	EZ2010H-FAPE	12, 24, 36, 48, …	SK12/48-CHDD-NG030-045
(3)	After Filter Element / *Nachgeschaltetes Filterelement*	✓	✓	✓	✓					EZ1030U-FAAE	12, 24, 36, 48, …	SK12/48-CHDD-NG002-010
						✓	✓			EZ1140U-FAPE	12, 24, 36, 48, …	SK12/48-CHDD-NG015-020
								✓	✓	EZ2010U-FAPE	12, 24, 36, 48, …	SK12/48-CHDD-NG030-045
(4)	Pre Filter Drain / *Vorgeschalteter Filterablass*	✓	✓	✓	✓	✓	✓	✓	✓	IAD516A	12, 24, 36, 48, …	SK12/48-CHDD-NG002-010 SK12/48-CHDD-NG015-020 SK12/48-CHDD-NG030-045
(5)	After Filter Drain / *Nachgeschalteter Filterablass*	✓	✓	✓	✓	✓	✓	✓	✓	SAD116	12, 24, 36, 48, …	SK12/48-CHDD-NG002-010 SK12/48-CHDD-NG015-020 SK12/48-CHDD-NG030-045
opt.	Servicekit ESD100 - ESD5277									SK-ESD	12	optional, add. to SK12/48-CHDD-NG (all sizes) if used ESD at pre filter
(9)	Silencer / *Schalldämpfer*	✓	✓	✓	✓					Silencer B28	12, 24, 36, 48, …	SK12/48-CHDD-NG002-010
						✓	✓			Silencer B48		SK12/48-CHDD-NG015-020
								✓	✓	Silencer B68		SK12/48-CHDD-NG030-045
(6)	Wear Part Kit incl. membrane, Pressure springs, o-rings, anchor (230VAC) / *Verschleißteilsatz inkl. Membran, Druckfedern, O-Ringe, Anker (230VAC)*	✓	✓	✓	✓					D03-3150300	48	SK48-CHDD-NG002-010
						✓	✓			D03-3150301	48	SK48-CHDD-NG015-020
								✓	✓	D03-3150302	48	SK48-CHDD-NG030-045
(7) + (8)	Wear Part Kits for 115VAC or 24VDC on request											
(10)	O-Ring Set / *O-Ring Satz*	✓	✓	✓	✓					D02-216084	48	SK12/48-CHDD-NG002-010
						✓	✓			D02-216085		SK12/48-CHDD-NG015-020
								✓	✓	D02-216086		SK12/48-CHDD-NG030-045
(11)	Dust Sieve Set / *Staubsiebsatz*	✓	✓	✓	✓					D02-216087	48	SK12/48-CHDD-NG002-010
						✓	✓			D02-216088		SK12/48-CHDD-NG015-020
								✓	✓	D02-216089		SK12/48-CHDD-NG030-045
opt.	Dew Point Sensor / Taupunktsensor									LCS 217 G1/2 -50°C	12	optional, add. to SK12/48-CHDD-NG (all sizes) / dew point -50°C
										LCS 410 G1/2 – 100°C	12	optional, add. to SK12/48-CHDD-NG (all sizes) / dew point -100°C

Remarks:

- It is recommended that maintenance has to be done every 12 month or after the operating hours have ended for preserving good performance to the dryer and downstream system of the dryer.
- Use only genuine parts for best performance.

Declaration of Conformity

DECLARATION OF CONFORMITY

AIRFILTER ENGINEERING (M) SDN BHD

Declares, under its sole responsibility for design and manufacture, that the products detailed below comply with the Pressure Equipment Directive 2014/68/EU, falling under Article 4.3, the Electromagnetic Compatibility Directive 2014/30/EU, and the Low Voltage Directive 2014/35/EU.

Product Type	Air Dryers
Product Models	C-HDD-N002, C-HDD-N004
Applied Standards	ASME VIII Div II, 2010 EN 61000-6-3:2021 EN 61000-6-2:2019
Vessel Design Pressure	16 Bar g
Vessel Design Temperature	50°C

Daniel Chai
Senior Project Manager
December 13, 2021

AIRFILTER® ENGINEERING

HEAD OFFICE:
No. 20 Jalan Anggerik Mokara 31/47, Section 31,
Kota Kemuning, 40460 Shah Alam, Selangor, Malaysia.
Tel: +60 (0)3 – 5122 4975 Fax: +60 (0)3 – 5121 2069
enquiries@airfilterengineering.com
http://www.airfilterengineering.com

EUROPEAN OFFICE:
AFE Airfilter Europe GmbH
Gutenbergstr. 5
D-53332 Bornheim, Germany.
Tel: + 49 (0) 2227–920 91–0
Fax: + 49 (0) 2227–920 91–10
office@airfilter-europe.com

Safety/pressure-limiting devices are not included with the products. It is the responsibility of the user to ensure such devices are appropriately sized and connected to the products.

DECLARATION OF CONFORMITY

AIRFILTER ENGINEERING (M) SDN BHD

Declares that the products detailed below comply with the Pressure Equipment Directive 2014/68/EU, the Electromagnetic Compatibility Directive 2014/30/EU, and the Low Voltage Directive 2014/35/EU.

Product Type	Air Dryers
Product Models	C-HDD-N007, C-HDD-N010, C-HDD-N015, C-HDD-N020, C-HDD-N030, C-HDD-N045
Applied Standards	ASME VIII Div 2, 2010 EN 61000-6-3:2021 EN 61000-6-2:2019
Vessel Design Pressure	16 Bar g
Vessel Design Temperature	60°C

For Pressure Equipment Directive 2014/68/EU		
Notified Body	LRQA Nederland B.V. (EU Notified Body No. 0343) Rotterdam, Netherlands.	CE 0343
EC Certification of Conformity No.	0343/PED/MUM/0710038/5 Conformity Module D1	

Daniel Chai
Senior Project Manager
July 15, 2022

AIRFILTER® ENGINEERING

HEAD OFFICE:
No. 20 Jalan Anggerik Mokara 31/47, Section 31,
Kota Kemuning, 40460 Shah Alam, Selangor, Malaysia.
Tel: +60 (0)3 – 5122 4975 Fax: +60 (0)3 – 5121 2069
enquiries@airfilterengineering.com
http://www.airfilterengineering.com

EUROPEAN OFFICE:
AFE Airfilter Europe GmbH
Gutenbergstr. 5
D-53332 Bornheim, Germany.
Tel: + 49 (0) 2227–920 91–0
Fax: + 49 (0) 2227–920 91–10
office@airfilter-europe.com

Safety/pressure-limiting devices are not included with the products. It is the responsibility of the user to ensure such devices are appropriately sized and connected to the products.

LRQA

EU CERTIFICATE OF CONFORMITY

In accordance with the requirements of the Pressure Equipment Directive 2014/68/EU

This is to certify that the Quality Management System of:

AIRFILTER ENGINEERING (M) SDN BHD
No. 20 Jalan Anggerik Mokara 31/47, Section 31
Kota Kemuning, 40460 Shah Alam
Selangor, Malaysia

has been assessed against the requirements of Annex III, Module D1 of the above Directive and conforms to the requirements for the products shown below:

Manufacture of compressed air and gas systems and associated components

Approval is subject to the continued maintenance of the quality system in accordance with the requirements of the above Directive for the product(s) listed on the attached schedule.

Authorisation is hereby given to use the Notified Body Identification Number in accordance with the requirements of the specified Directive in relation to the products as identified above.

Certificate No.:	0343/PED/MUM/0710038/5
Original Approval:	31 August 2009
Current Certificate:	21 July 2022
Certificate Expiry:	30 August 2024
Notified Body No. 0343	

B.Viswanath on behalf of LRQA Nederland B.V.

LRQA Nederland B.V. (Reg. no. 24247948) is a private limited company registered in the Netherlands with registered office at George Hintzenweg 77, 3068 AX Rotterdam. A subsidiary of LRQA Group Limited.
LRQA Group Limited, its affiliates and subsidiaries and their respective officers, employees or agents are, individually and collectively, referred to in this clause as 'LRQA'. LRQA assumes no responsibility and shall not be liable to any person for any loss, damage or expense caused by reliance on the information or advice in this document or howsoever provided, unless that person has signed a contract with the relevant LRQA entity for the provision of this information or advice and in that case any responsibility or liability is exclusively on the terms and conditions set out in that contract.

LRQA

CERTIFICATE SCHEDULE
0343/PED/MUM/0710038/5

In accordance with the requirements of the Pressure Equipment Directive 2014/68/EU

Product(s)

PRODUCT	MODELS
Air Filters	G220, G290, GE290, G430, GE430, G625, GE625, G775, GE775, R233, R343, R514, Z013, Z014, Z017, Z018, Z019, D20, D22, D24, D26, D30, D32, ZE014, ZE017, ZE018, ZE019, *GE220, ZE013*
Air Dryer	C-HDD-N007, C-HDD-N010, C-HDD-N015, C-HDD-N020, C-HDD-N030 and C-HDD-N045
Activated Carbon Towers	C-ACT-N007, C-ACT-N010, C-ACT-N015, C-ACT-N020, C-ACT-N030 and C-ACT-N045
Compressed Air Dryer with Purifier	C-HDAD-N007, C-HDAD-N010, C-HDAD-N015, C-HDAD-N020, C-HDAD-N030 and C-HDAD-N045
Water Separators	CS220, RCS343, RCS343-65, ZCS013, DCS20, DCS24, DCS30, *CSE220, ZCSE013*

Schedule Issue: 04

Date of Schedule Issue: 21 July 2022

Notified Body No. 0343

B.Viswanath on behalf of LRQA Nederland B.V.

LRQA Nederland B.V. (Reg. no. 24247948) is a private limited company registered in the Netherlands with registered office at George Hintzenweg 77, 3068 AX Rotterdam. A subsidiary of LRQA Group Limited.
LRQA Group Limited, its affiliates and subsidiaries and their respective officers, employees or agents are, individually and collectively, referred to in this clause as 'LRQA'. LRQA assumes no responsibility and shall not be liable to any person for any loss, damage or expense caused by reliance on the information or advice in this document or howsoever provided, unless that person has signed a contract with the relevant LRQA entity for the provision of this information or advice and in that case any responsibility or liability is exclusively on the terms and conditions set out in that contract.

At www.nordicfiltration.com you will find a wide selection of filtration products ready for you to order.

Nordic Filtration offers a wide selection of filtration products for water treatment. We have stock in Denmark from where we distribute all of our products to Scandinavia and the the rest of the world.

You can buy our products on local websites or by contacting us by phone or e-mail. Information about our products as well as brochures and manuals can be found on our website (www.nordicfiltration.com).

We can adapt all of our filtration products to your needs, and we offer visits from our consultants in order to find the right solution for you.

Glasvænget 6
5492 Vissenbjerg
Denmark

+45 72 25 10 00
info@nordicfiltration.com
www.nordicfiltration.com