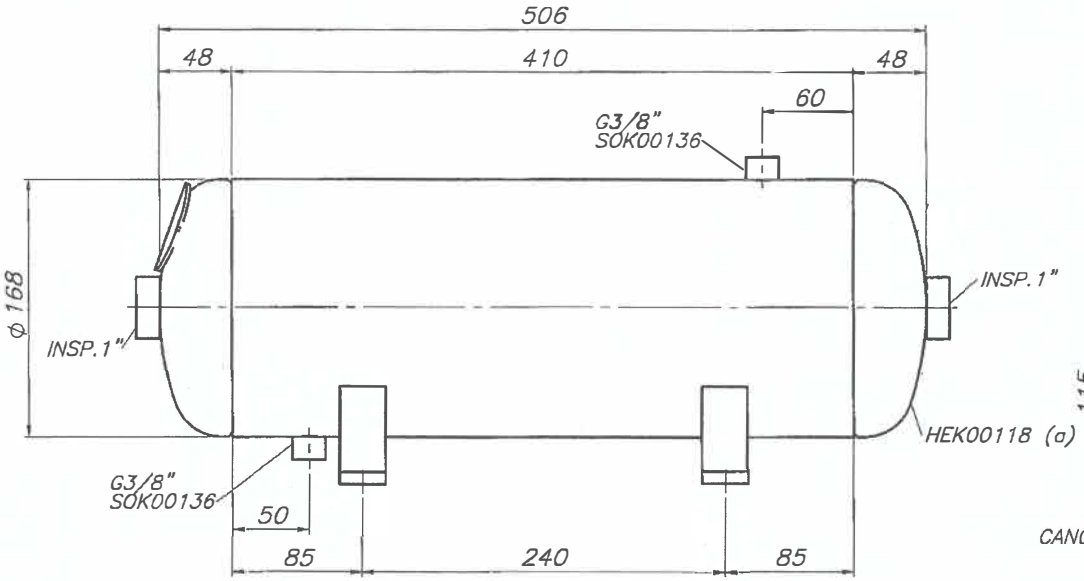

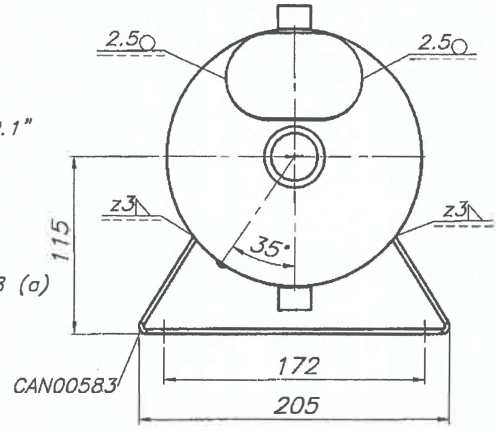

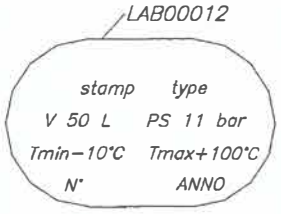

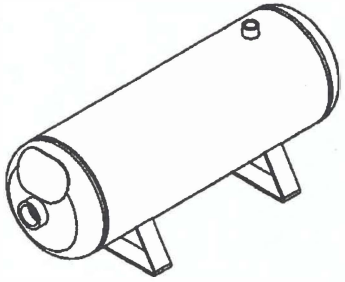

REV.	REASON OF REVISION	DATE	SIGN.
01	(a)Cambiato codice fondo, era HEK00115	30/01/2012	P.Sorrentino

	PREPARED	APPROVED by ENG.MNGR.	REVIEWED by Q.C.MNGR.
DATE	17/01/2012	30/01/2012	
SIGNATURE	P.Sorrentino		

REPLACE DRAWINGS: –

SURFACE TREATEMENTS: –

TOLERANCES, IF NOT INDICATED, ACCORDING TO: C–G SE 03.03/3

SHEET A3

SCALE 1:3

AIR RECEIVER LT.10

– STANDARD –

DRAWING No.

REV. 01