Float Level Switch

Specifications

Size, ”(inch):	-
Filtration rating, µm:	-
Flowrate, l/min:	-
Max. Temp. C°:	-
Diff. Pressure:	-
Efficiency, %:	-
Connection:	-
Material:	-
O-ring:	-
Approval(s):	-

Level Switches for Industrial Applications

Industrial level switches provide a reliable and maintenance-free solution for precise water level control. Their optimized design, featuring an internal counterweight, ensures resistance to fouling from impurities and sediment accumulation. This makes them particularly suitable for use in clean water, sewage, and wastewater systems.
These switches are highly effective in both filling and draining operations across various applications, including tanks, reservoirs, wells, and collection pits. Their robust construction ensures long-term performance even in demanding environments.

Technical specifications	
Cable Length	10m
Density op. range	0.9 - 1.10 kg/dm3
Max. temp.	+ 60 °C
Protection degree at 20°C	IP 68 (40 m)
Max. Voltage	250 V~ , 125 V=
Inverter microswitch	Unipolar / Single pole; 10 A, 250 V~ 1/2 CV; 4A, 30 V=
Cable mat.	Polypropylene
Sheath mat.	EPDM

Installation instructions

Sharp and jagged edges, Stress and mechanical tensions must be prevented in the installation. Avoid using cable extensions.
If cable is extended, an splice connection box must be used to seal the splicing and prevents from humidity.

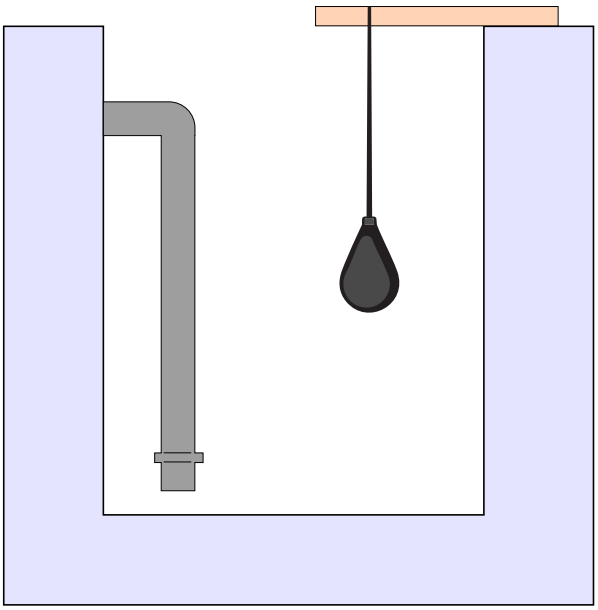

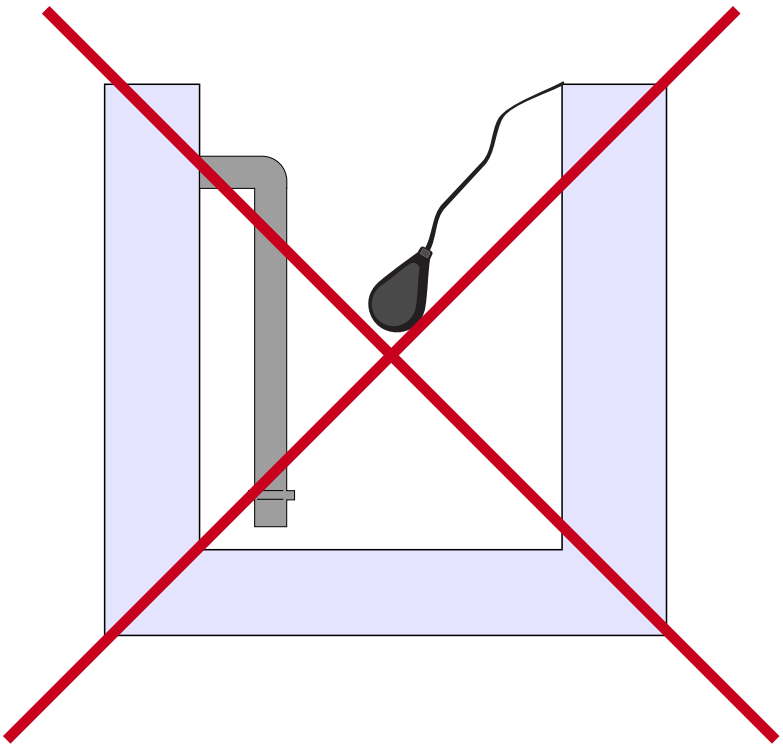
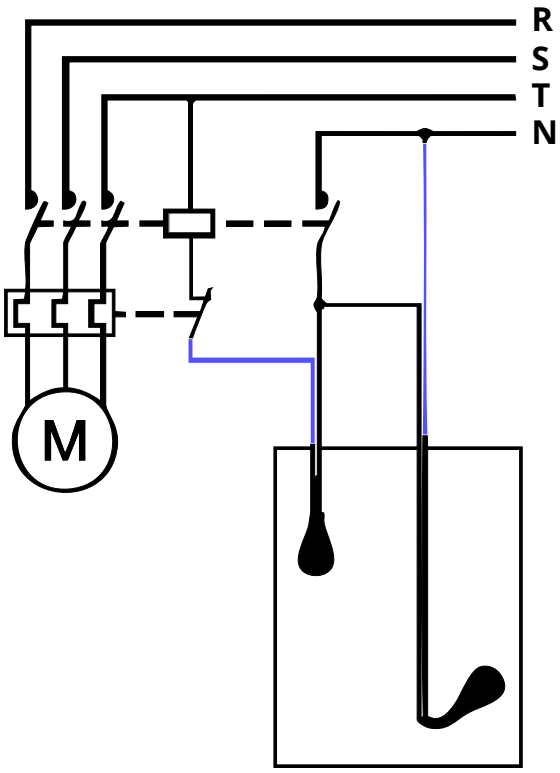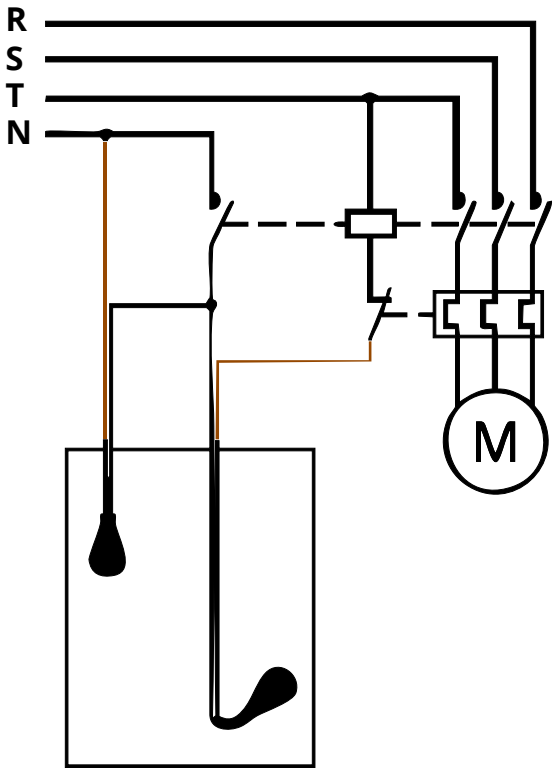
Wiring diagram